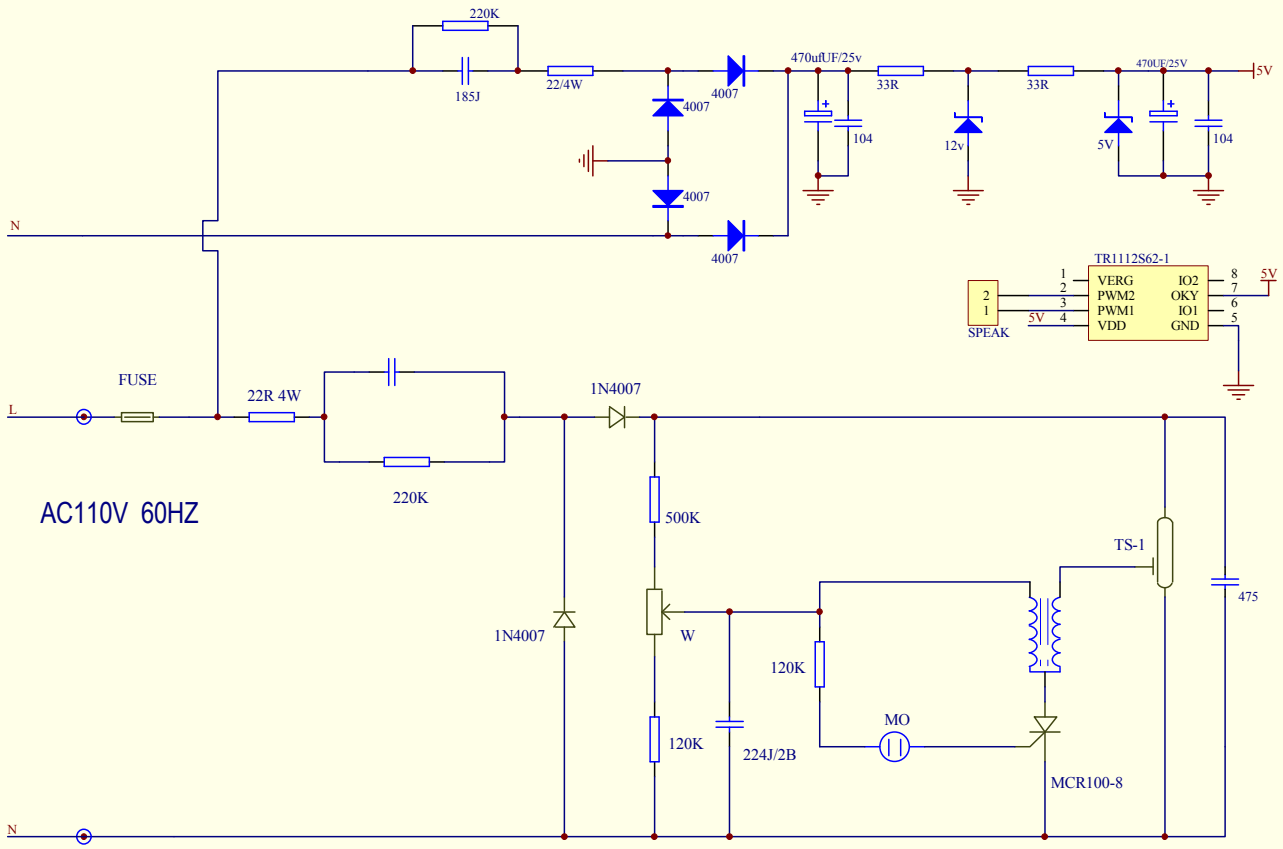

Title		
Size A4	Number	Revision
Date: 29-Mar-2012		Sheet of
File: F:\电路图(重要勿动)\打雷声频闪灯\My		Drawn By: