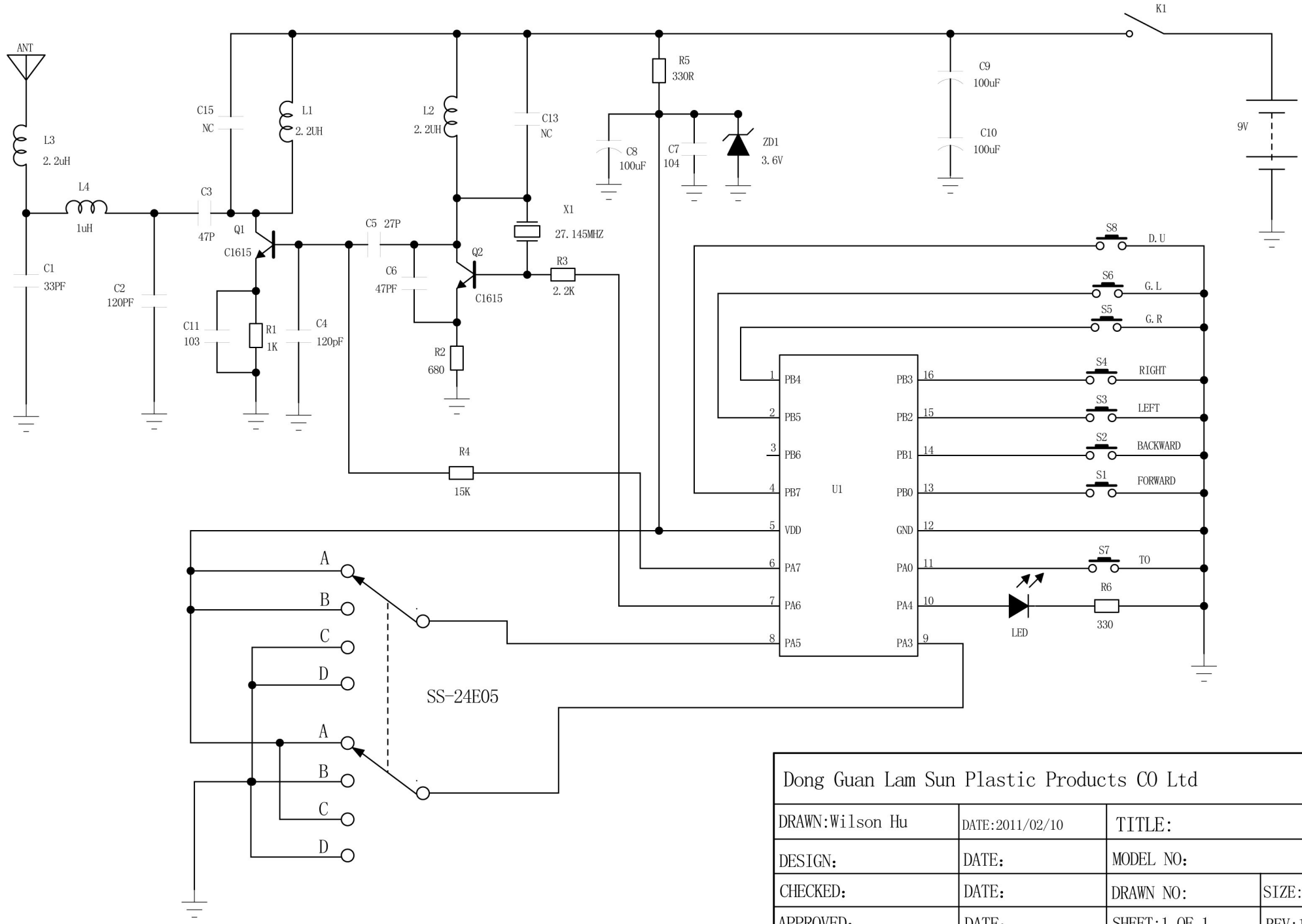

Dong Guan Lam Sun Plastic Products CO Ltd			
DRAWN:Wilson Hu	DATE:2011/02/10	TITLE:	
DESIGN:	DATE:	MODEL NO:	
CHECKED:	DATE:	DRAWN NO:	SIZE:A4
APPROVED:	DATE:	SHEET:1 OF 1	REV:1.0