130mm

80mm

130mm

120克布纹本白纸裱1200g纸板
logo烫银

50mm

30mm

90mm

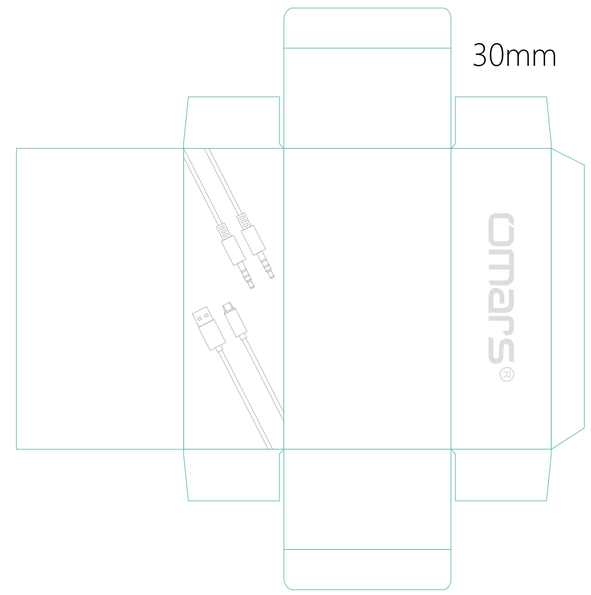

300g白卡纸

124mm

78mm

124mm

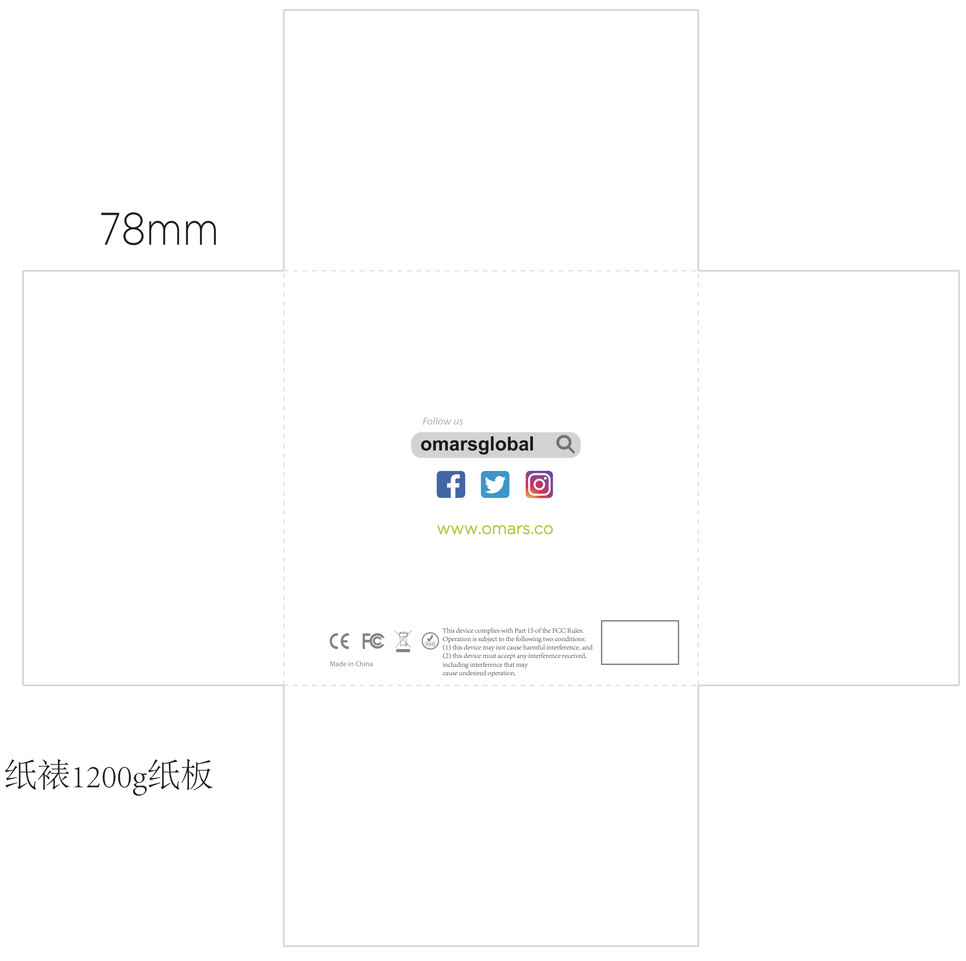

120克布纹本白纸裱1200g纸板