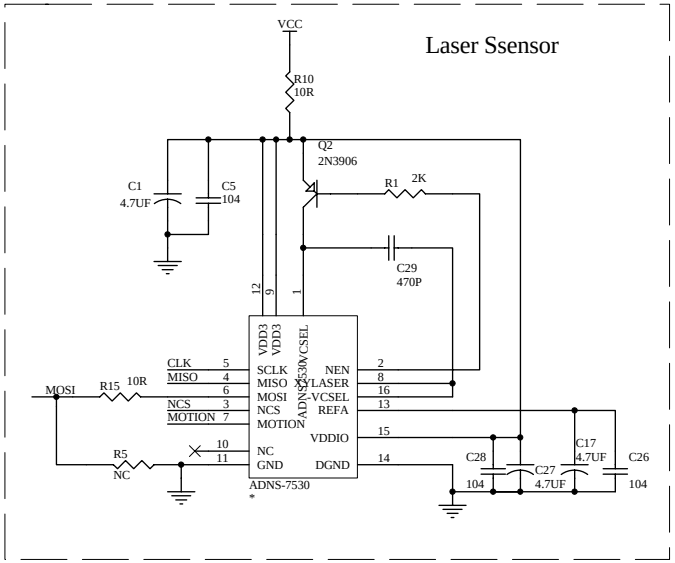

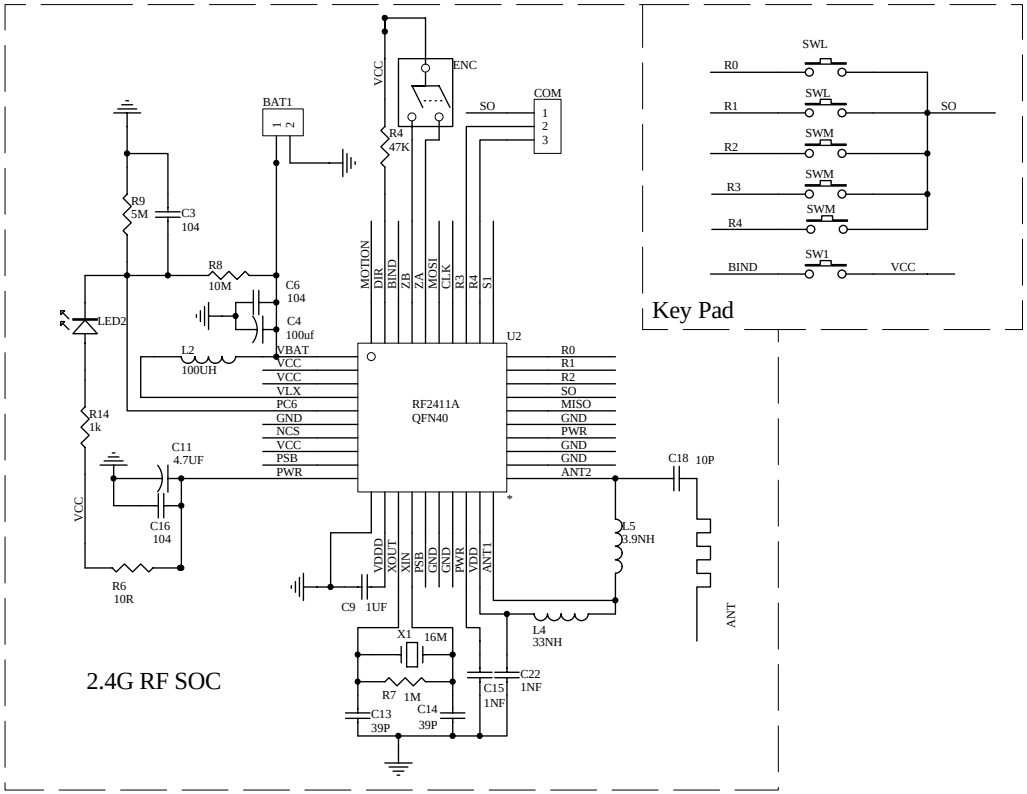

Title		
Size B	Number	Revision
Date: 3-Aug-2010	Sheet of	
File: C:\Documents and Settings\Administrator\桌面\PCB02~1.DDB	Drawn By:	