Schematic Diagram

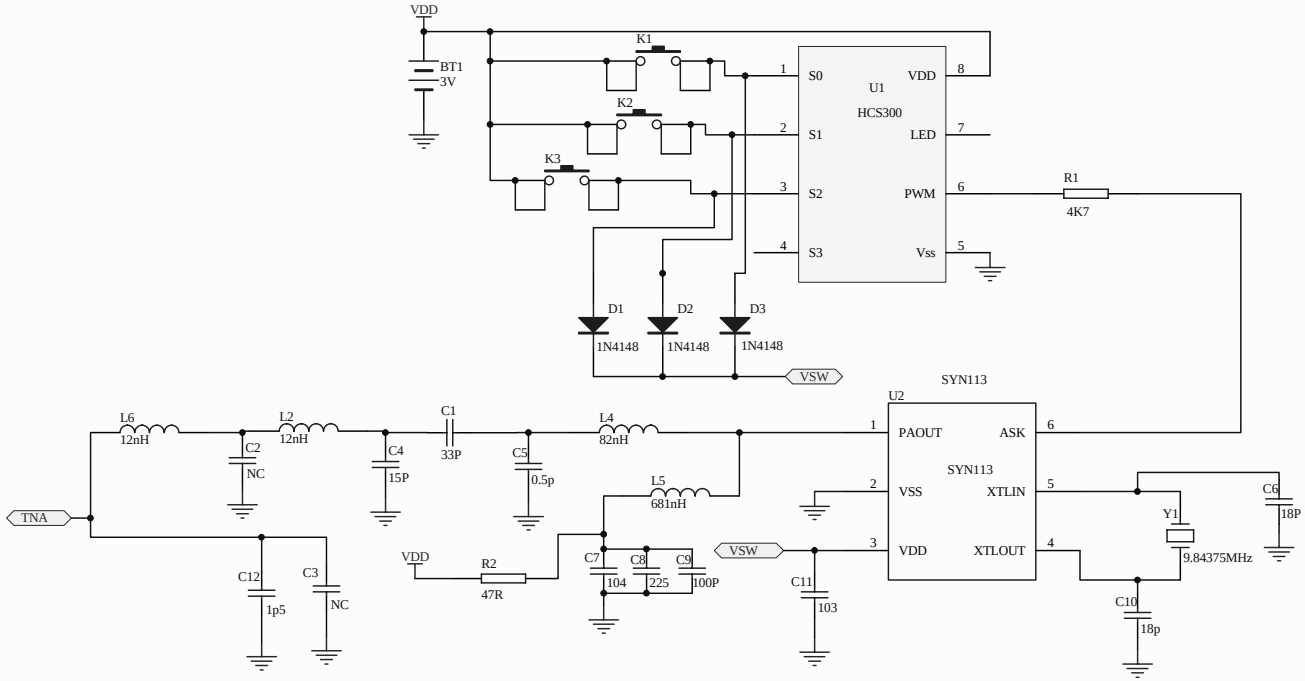

Title	发送器原理图（标准学习算法）	
Size B	Number	Revision V0.0
Date: 2011-9-15		Sheet of
File: E:\哈飞\..\mode2010-12-16.Sch		Drawn By: