SIZE	A4

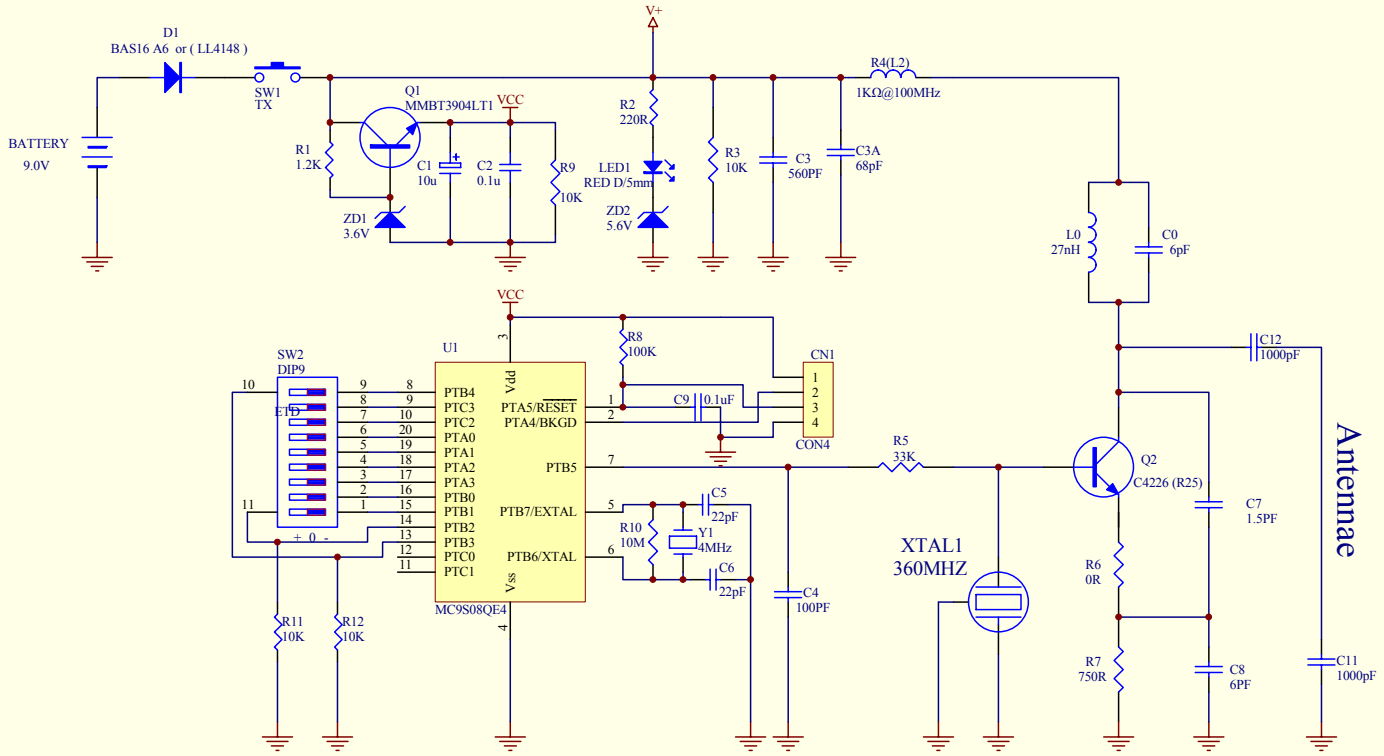

FILE CODE:			Heddolf HK Limited		
DESIGN:	A.Y.	MODEL:	GDO-5502 Ver.B	CAT NO:	
CHECKED BY:		NAME:	C/O 220 Gate Remote	REV:	A
PERMITED BY:		DATE:	2009-03-19	DWG BY:	ZHE