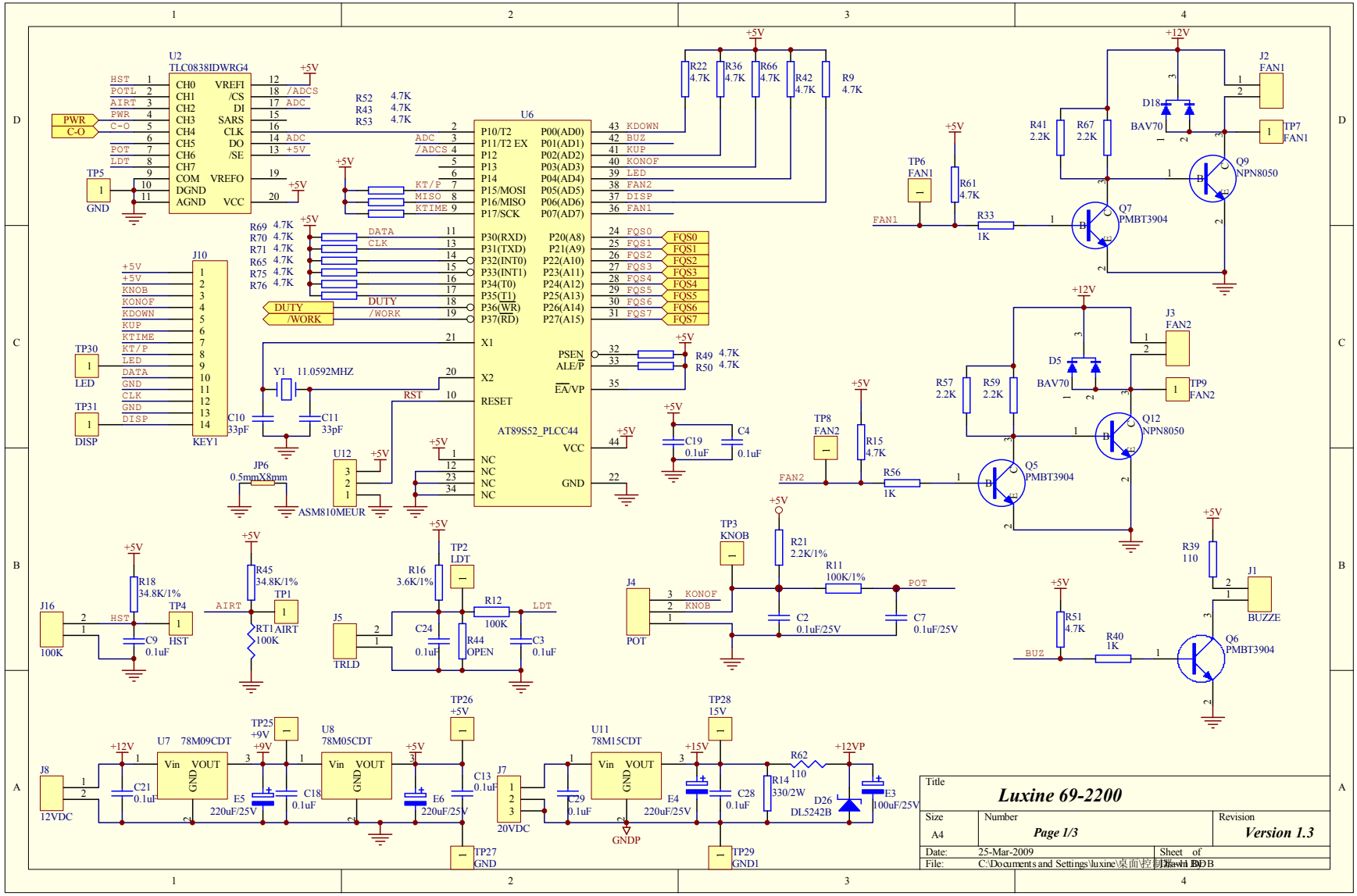
U2
TLC0838IDWRG4
CH0 CH1 CH2 CH3 CH4 CH5 CH6 CH7 COM DGND AGND
VREFI /CS DI SARS CLK DO /SE VREFO VCC
HST POTL AIRT PWR C-O POT LDT
/ADCS ADC +5V
PWR
C-O
TP5
GND
U6
AT89S52_PLCC44
P10/T2 P11/T2 EX P12 P13 P14 P15/MOSI P16/MISO P17/SCK
P30(RXD) P31(TXD) P32(INT0) P33(INT1) P34(T0) P35(T1) P36(WR) P37(RD)
P00(AD0) P01(AD1) P02(AD2) P03(AD3) P04(AD4) P05(AD5) P06(AD6) P07(AD7)
P20(A8) P21(A9) P22(A10) P23(A11) P24(A12) P25(A13) P26(A14) P27(A15)
X1 X2 RESET PSEN ALE/P EA/VP VCC GND
KDOWN BUZ KUP KONOF LED FAN2 DISP FAN1
FQS0 FQS1 FQS2 FQS3 FQS4 FQS5 FQS6 FQS7
KT/P MISO KTIME DATA CLK DUTY /WORK RST
R52 R43 R53 4.7K
R69 R70 R71 R65 R75 R76 4.7K
R22 R36 R66 R42 R9 4.7K
R49 R50 4.7K
J10
KEY1
+5V KNOB KONOF KDOWN KUP KTIME KT/P LED DATA GND CLK GND DISP
TP30
LED
TP31
DISP
Y1 11.0592MHZ
C10 33pF
C11 33pF
JP6
0.5mmX8mm
U12
ASM810MEUR
C19 0.1uF
C4 0.1uF
J2
FAN1
TP7
FAN1
D18
BAV70
Q9
NPN8050
Q7
PMBT3904
TP6
FAN1
R61 4.7K
R33 1K
R41 2.2K
R67 2.2K
+12V
J3
FAN2
TP9
FAN2
D5
BAV70
Q12
NPN8050
Q5
PMBT3904
R57 2.2K
R59 2.2K
TP8
FAN2
R15 4.7K
R56 1K
FAN2
J16
100K
R18 34.8K/1%
C9 0.1uF
TP4
HST
R45 34.8K/1%
TP1
AIRT
RT1 100K
J5
TRLD
R16 3.6K/1%
TP2
LDT
R12 100K
C24 0.1uF
R44 OPEN
C3 0.1uF
J4
POT
TP3
KNOB
R21 2.2K/1%
R11 100K/1%
C2 0.1uF/25V
C7 0.1uF/25V
R39 110
J1
BUZZE
R51 4.7K
R40 1K
BUZ
Q6
PMBT3904
J8
12VDC
U7 78M09CDT
Vin VOUT GND
C21 0.1uF
E5 220uF/25V
C18 0.1uF
TP25 +9V
U8 78M05CDT
E6 220uF/25V
TP26 +5V
TP27 GND
C13 0.1uF
J7
20VDC
U11 78M15CDT
C29 0.1uF
E4 220uF/25V
GNDP
TP28 15V
C28 0.1uF
TP29 GND1
R14 330/2W
R62 110
D26 DL5242B
+12VP
E3 100uF/25V
Title
Luxine 69-2200
Size A4
Number Page 1/3
Revision Version 1.3
Date: 25-Mar-2009
Sheet of
File: C:\Documents and Settings\luxine\桌面\控制板.DDB
Drawn By:

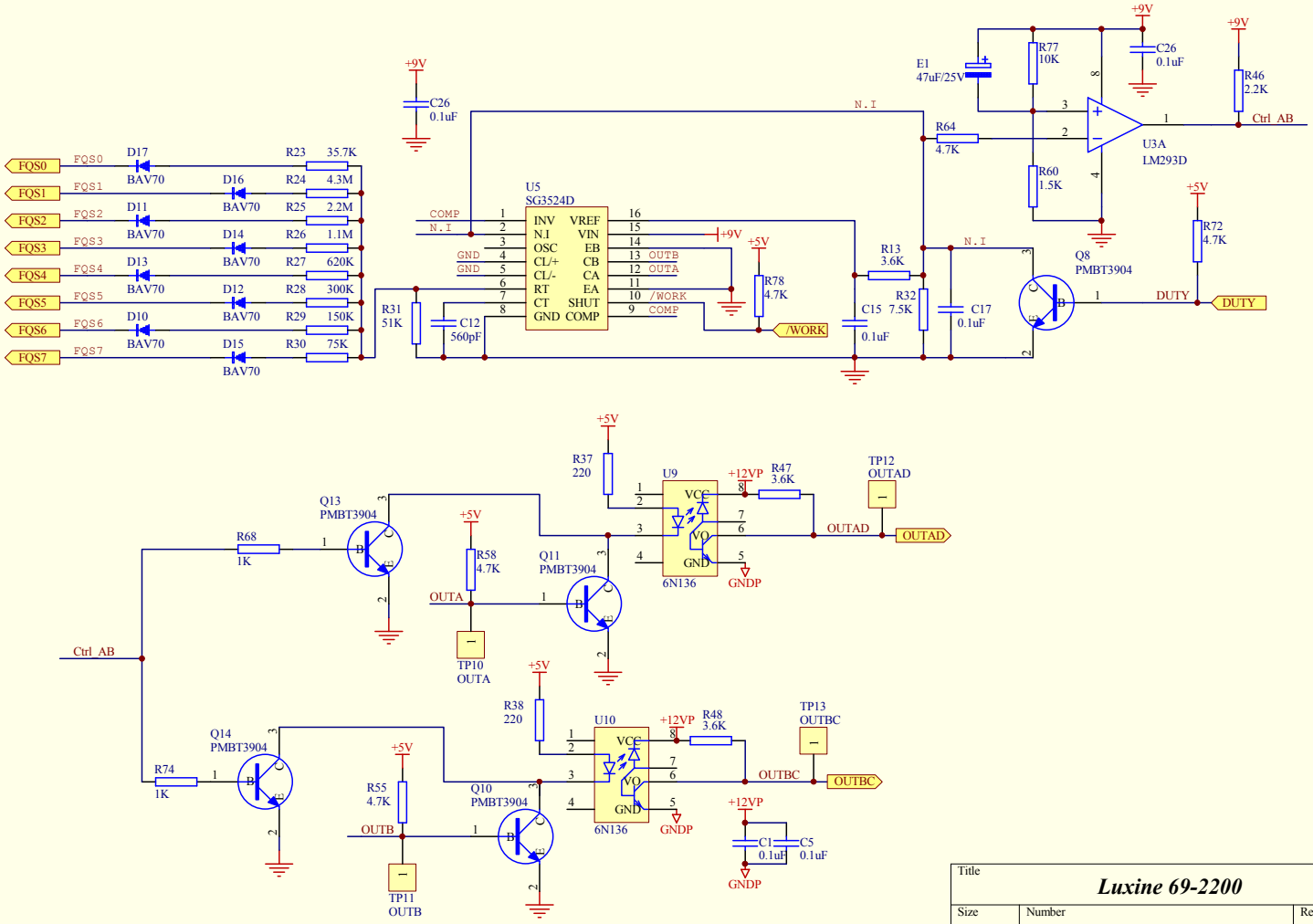

Title		
	Luxine 69-2200	
Size: A4	Number: ***Page 2/3, Color Legend is on this page***	Revision: ***Version 1.3***
Date: 25-Mar-2009	Sheet of	
File: C:\Documents and Settings\luxine\桌面\BACKWARD.DDB	Drawn By:	

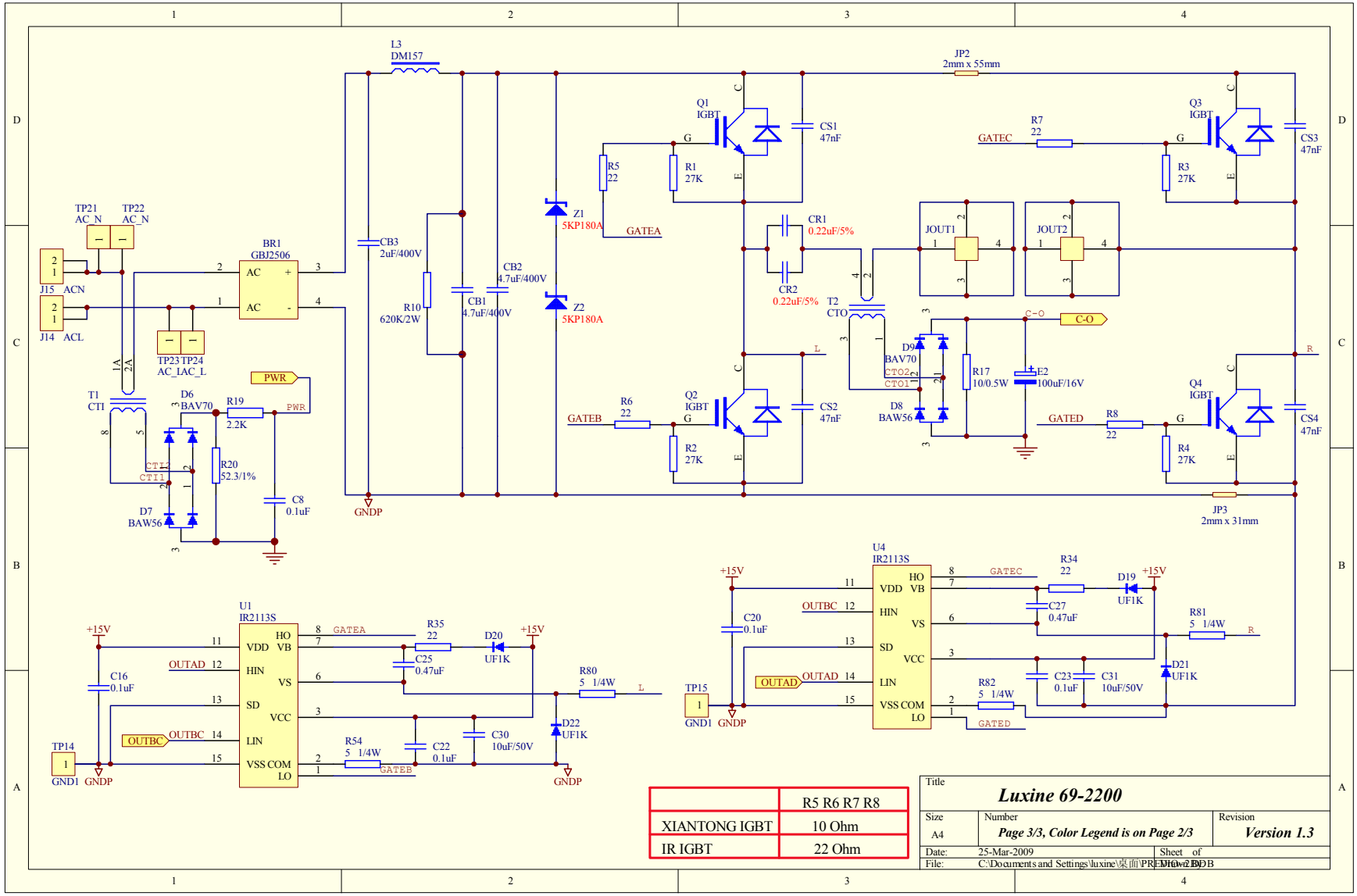

	R5 R6 R7 R8
XIANTONG IGBT	10 Ohm
IR IGBT	22 Ohm

Title	***Luxine 69-2200***	
Size A4	Number ***Page 3/3, Color Legend is on Page 2/3***	Revision ***Version 1.3***
Date: 25-Mar-2009	Sheet of	
File: C:\Documents and Settings\luxine\桌面\PRE\Luxine.DDB	Drawn By:	