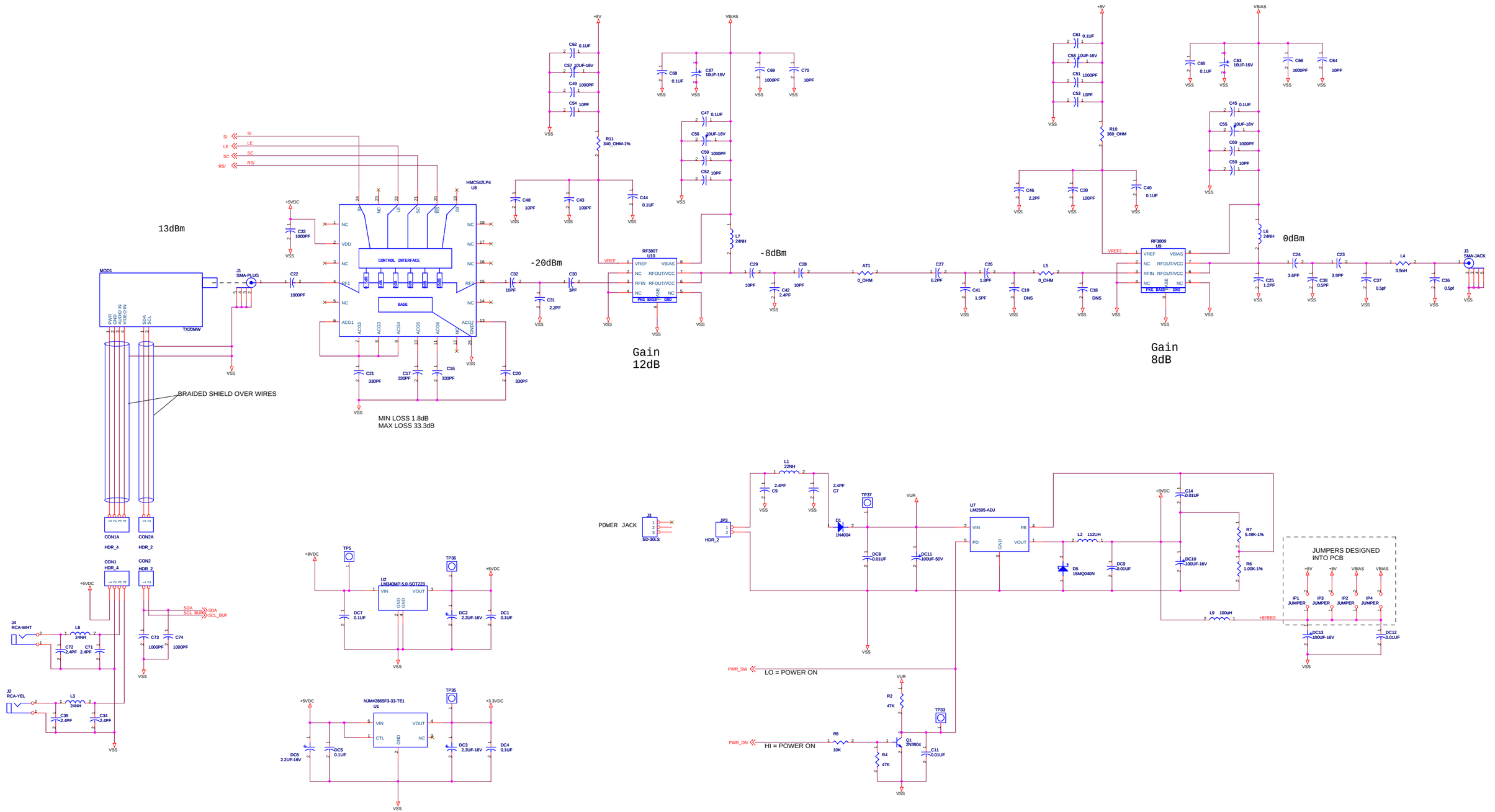
13dBm
-20dBm
-8dBm
0dBm
Gain 12dB
Gain 8dB
HMC542LP4 U8
CONTROL INTERFACE
BASE
RF3807 U10
RF3809 U9
MOD1
TX20MW
J1 SMA-PLUG
J3 SMA-JACK
BRAIDED SHIELD OVER WIRES
MIN LOSS 1.8dB
MAX LOSS 33.3dB
CON1A HDR_4
CON2A HDR_2
CON1 HDR_4
CON2 HDR_2
J4 RCA-WHT
J2 RCA-YEL
U2 LM340MP-5.0-SOT223
U1 NJM2855F3-33-TE1
POWER JACK
J3 SD-30LS
JP3 HDR_2
U7 LM2595-ADJ
D1 1N4004
D5 15MQ040N
Q1 2N3904
JUMPERS DESIGNED INTO PCB
LO = POWER ON
HI = POWER ON
Electronic Display Applications, Inc.
121 Witmer Rd., Horsham, PA 19044
Phone (215) 675-1700 Fax (215) 675-9755
SL-1550-T15 2.4GHz Transmitter - RF CIRCUITS
Size D
Document Number SD-0122-01
Rev A
Date: Friday, June 27, 2008
Sheet 1 of 4

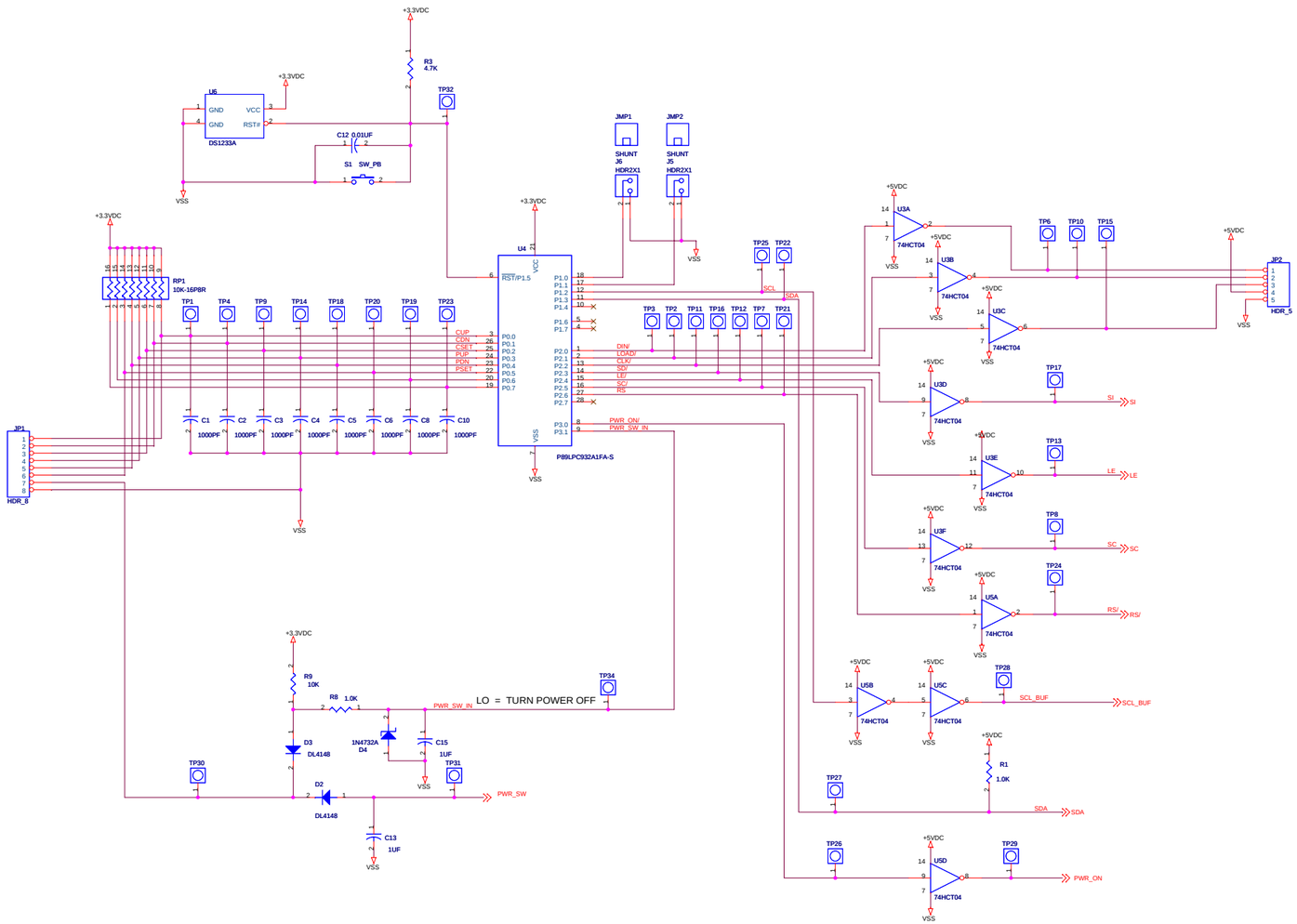

Electronic Display Applications, Inc.
121 Witmer Rd., Horsham, PA 19044
Phone (215) 675-1700 Fax (215) 675-9755

Title	SL-1550-T15 2.4GHz Transmitter - MICRO	
Size D	Document Number SD-0122-01	Rev A
Date: Friday, June 27, 2008	Sheet 2 of 4	

CHANNEL SELECTION

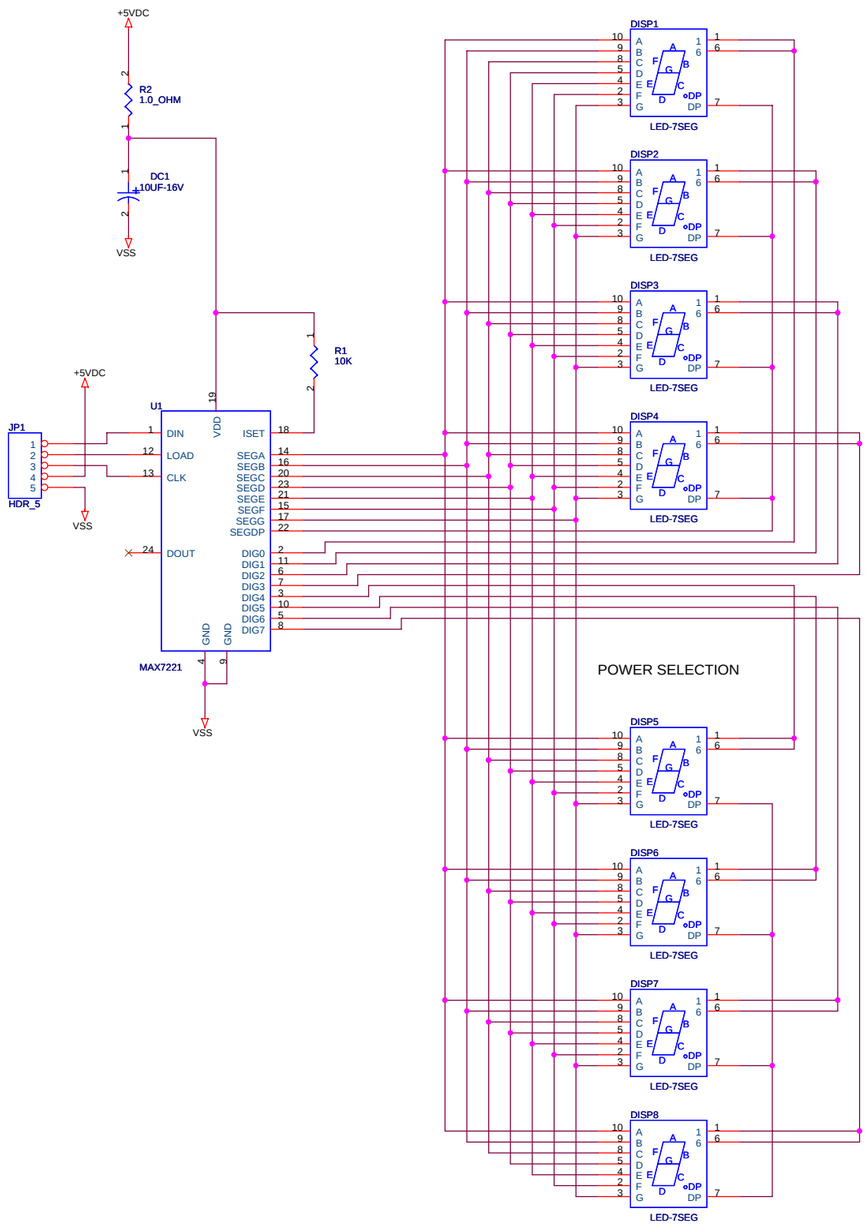

POWER SELECTION

DISPLAY PCB

Electronic Display Applications, Inc.
121 Witmer Rd., Horsham, PA 19044
Phone (215) 675-1700 Fax (215) 675-9755

Title: SL-1550-T15 2.4GHz Transmitter - LED PCB

Size	Document Number	Rev
C	SD-0133-01	A

Date: Monday, May 12, 2008 Sheet 3 of 4

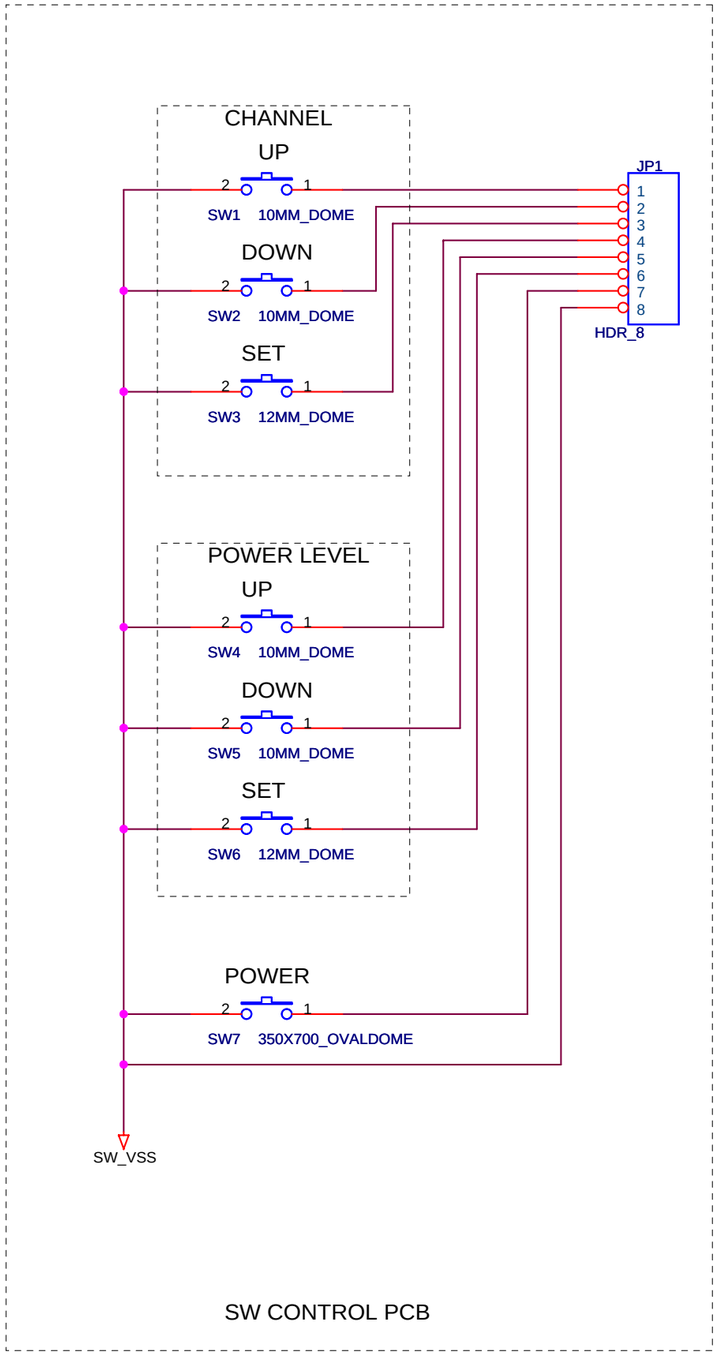

Electronic Display Applications, Inc.
121 Witmer Rd., Horsham, PA 19044
Phone (215) 675-1700 Fax (215) 675-9755

Title
SL-1550-T15 2.4GHz Transmitter - SWITCH PCB

Size	Document Number	Rev
B	SD-0134-01	A

Date: Monday, May 12, 2008 Sheet 4 of 4