Artwork

ENCLOSURE BACK

CLIP BACK

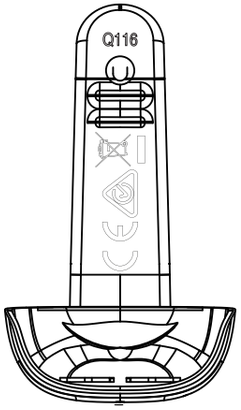

1:1 ARTWORK

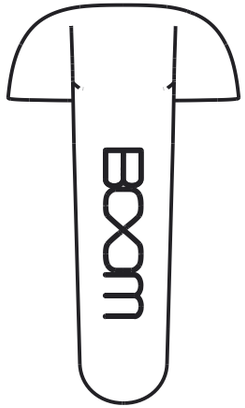

Notes:
All artwork embossed 0.2mm

Drawing 1:1

polk Bit Regulatory Artwork

		Approvals	Signature	Date
Date	6/1/2016	Project Manager		
Drawing #		Product Line Manager		
Scale	Full Size	Mechanical Engineer		
Prepared by	Ken Chae	QA Rep		
Color				
Process	Emboss			
Finish	Matte			
Notes				

Revision	Date	Description
A	6/1/2016	Original
B	6/15/2016	Updated FCC and IC ID, reduced emboss height to 0.2mm
C	6/21/2016	Added Model name
D	6/22/2016	Corrected artwork on clip.
E	6/30/2016	Add 5V 0.5A
F	7/5/2016	Added Q1,2,3,4 to clip

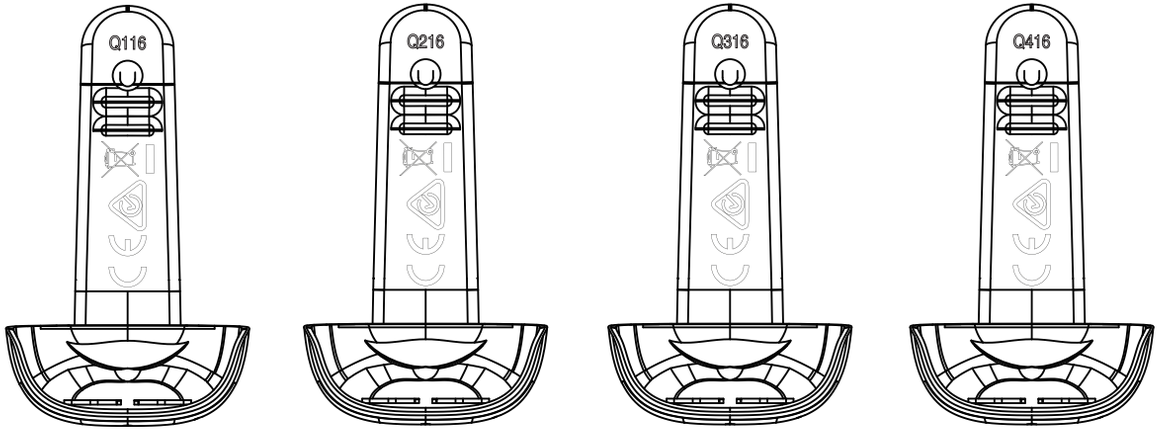
Q116
Q216
Q316
Q416