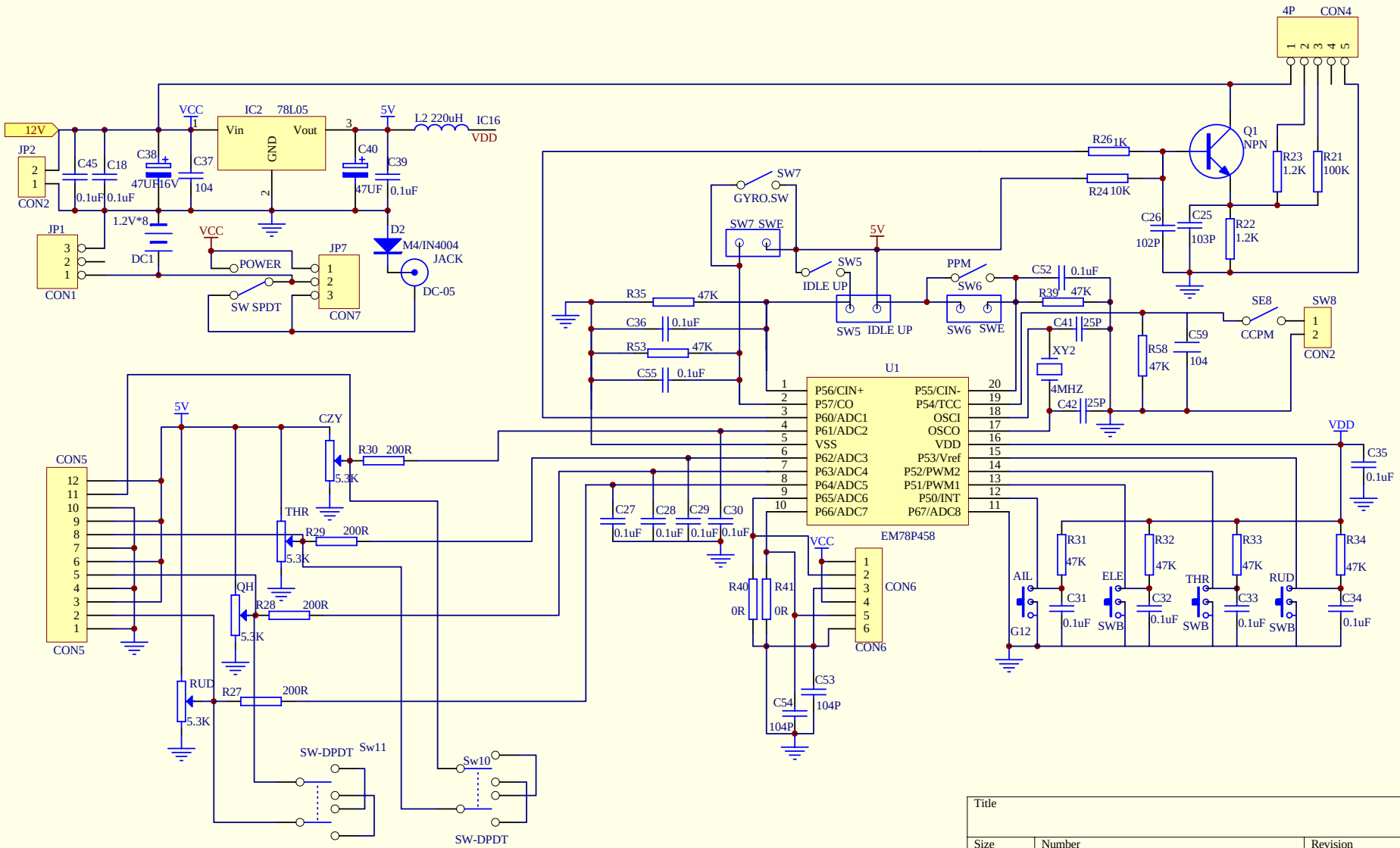

Title		
Size A4	Number TX1P01B---manipulative	Revision
Date: 21-Jun-2007	Sheet of	
File: \\Fdserver1\fd_7\新产品开发\SV1P03A\设计文件\TX1P01B.DDB		

Drawn By:

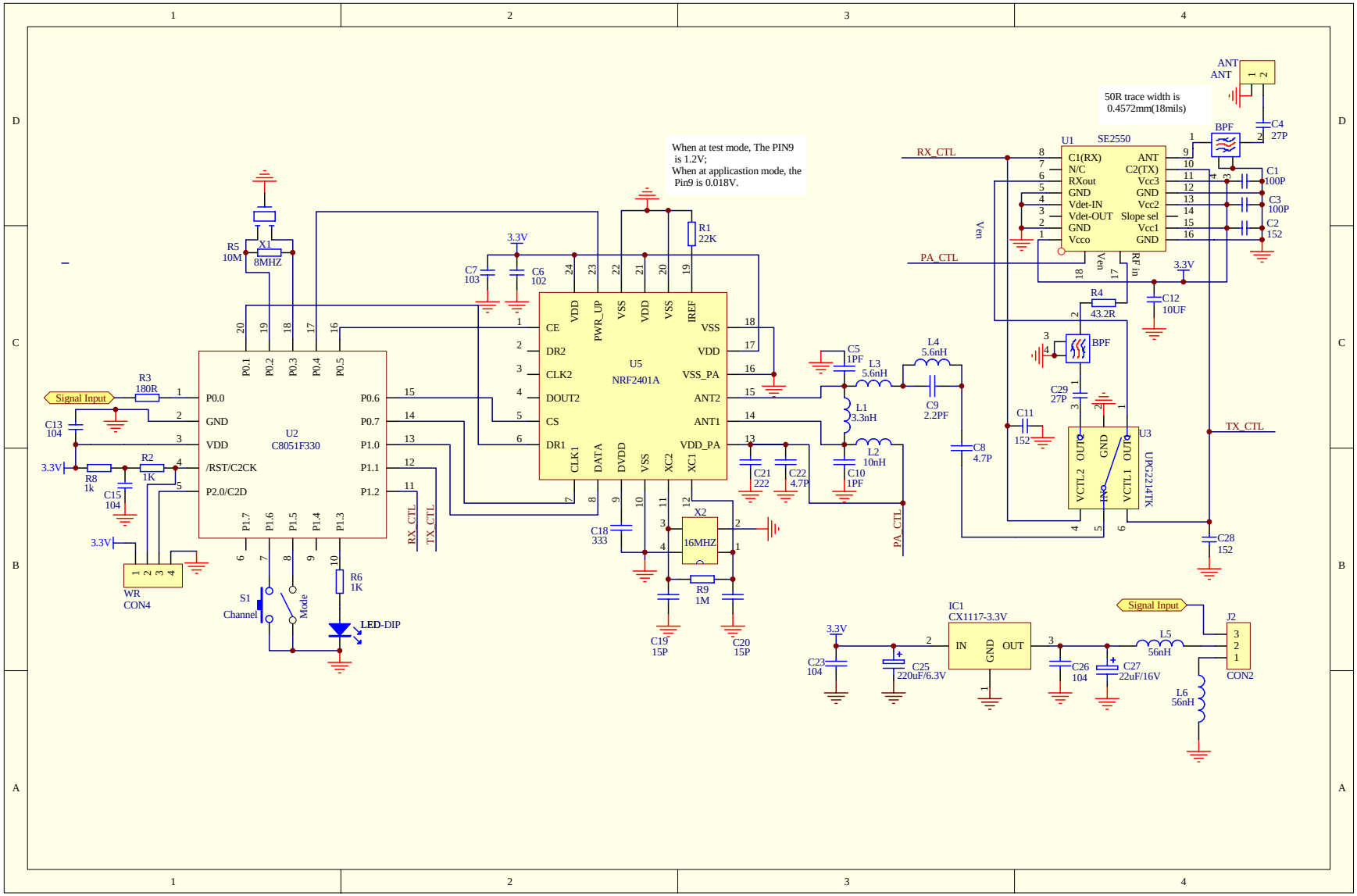
When at test mode, The PIN9 is 1.2V;
When at applicastion mode, the Pin9 is 0.018V.
50R trace width is 0.4572mm(18mils)
U2
C8051F330
U5
NRF2401A
U1
SE2550
U3
UPG2214TK
IC1
CX1117-3.3V
X1
8MHZ
X2
16MHZ
CON4
CON2
Signal Input
LED-DIP
Channel
Mode
RX_CTL
TX_CTL
PA_CTL
Vea
ANT
BPF
3.3V