XQGS16

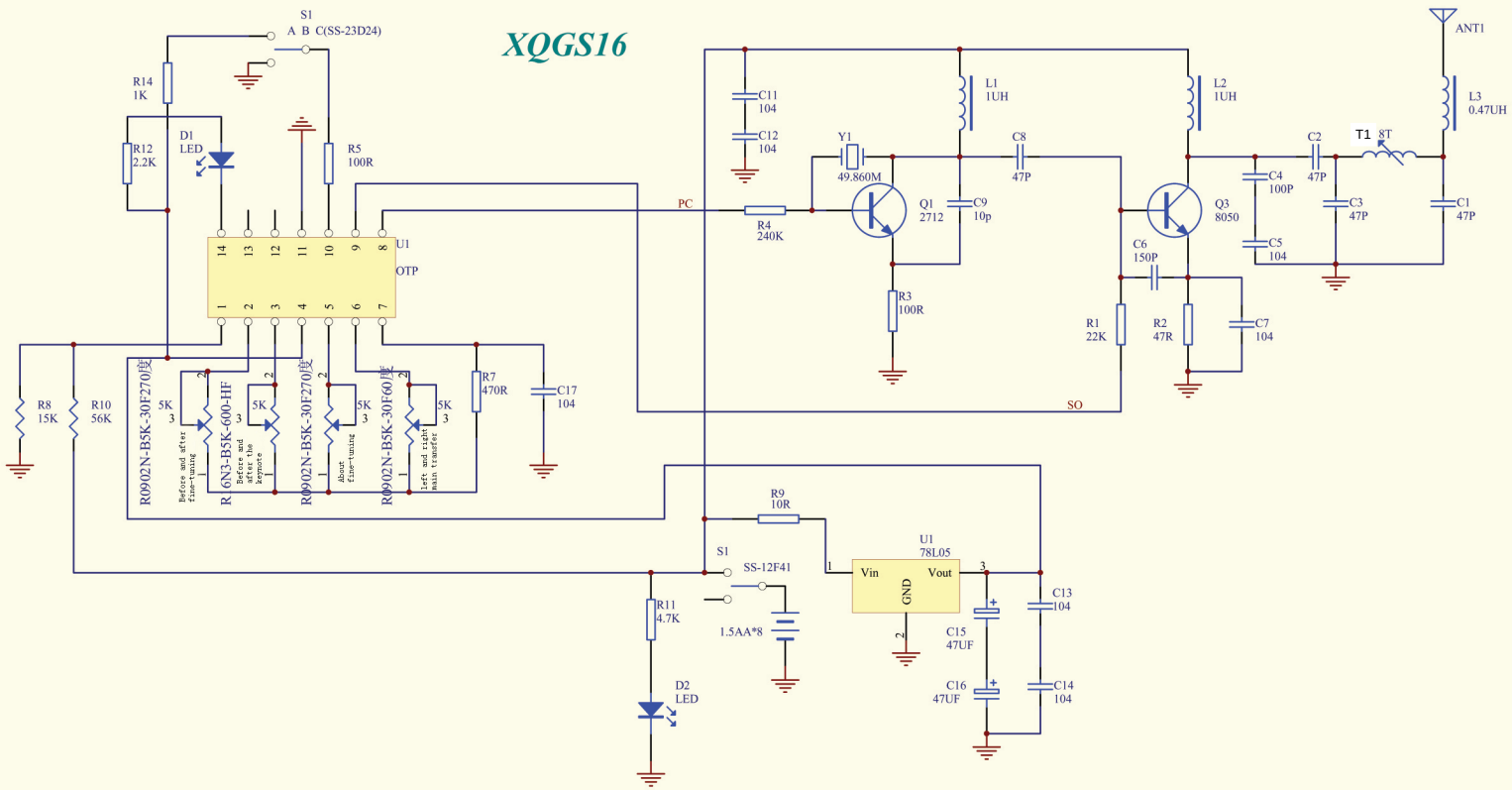
S1
A B C(SS-23D24)
R14
1K
R12
2.2K
D1
LED
R5
100R
U1
OTP
PC
SO
R8
15K
R10
56K
R0902N-B5K-30F270度
R 6N3-B5K-600-HF
R0902N-B5K-30F270度
R0902N-B5K-30F60度
5K
Before and after fine-tuning
Before and after the remote
About fine-tuning
Left and right main transfer
R7
470R
C17
104
C11
104
C12
104
Y1
49.860M
Q1
2712
C9
10p
R3
100R
R4
240K
L1
1UH
C8
47P
L2
1UH
Q3
8050
C6
150P
R1
22K
R2
47R
C7
104
C2
47P
T1 8T
C4
100P
C3
47P
C5
104
C1
47P
ANT1
L3
0.47UH
R9
10R
S1
SS-12F41
1.5AA*8
R11
4.7K
D2
LED
U1
78L05
Vin
Vout
GND
C15
47UF
C16
47UF
C13
104
C14
104