Accréditation
N°1-0312
Scope available on
www.cofrac.fr

TEST REPORT

N°: 172911-765736-E **Version : 02**

Subject	**Radio spectrum matters tests according to standards: 47 CFR Part 15.407 & RSS 247 Issue 1(DFS Only)**
Issued to	**SAGEMCOM 250 Route de l'Empereur 92848 – RUEIL MALMAISON FRANCE**
Apparatus under test	
Product	**TV Set Top Box**
Trade mark	**COGECO**
Manufacturer	**SAGEMCOM**
Model under test	**DIW3930 COGECO**
Serial number	**6211130035003**
FCC ID	**VW3DIW3930**
IC	**9140A-DIW3930**
Conclusion	See Test Program chapter
Test date	: July 5, 2021 to September 28, 2021
Test location	Moirans
Test Site	6500A-1 & 6500A-3
Registration Number	197516
Designation Number	FR0008
Sample receipt date	June 7, 2021
Composition of document	32 pages
Document issued on	September 30, 2021

Written by :
Armand MAHOUNGOU
Tests operator

Approved by :
Arnaud FAVETTE
Technical manager

This document shall not be reproduced, except in full, without the written approval of the LCIE. This document contains results related only to the items tested. It does not imply the conformity of the whole production to the items tested Unless otherwise specified or rule defined by the test method, the decision of conformity doesn't take into account the uncertainty of measures. This document doesn't anticipate any certification decision. . This document doesn't anticipate any certification decision. The COFRAC accreditation attests the technical capability of the testing laboratory for the only tests covered by the accreditation. If some tests mentioned in this report are carried out outside the framework of COFRAC accreditation, they are indicated by an asterisk (*).

PUBLICATION HISTORY

Version	Date	Author	Modification
01	August 3, 2021	Armand MAHOUNGOU	Creation of the document
02	September 30, 2021	Armand MAHOUNGOU	Customer request withdraw the pictures of equipment. Add Non-occupancy period

Each new edition of this test report replaces and cancels the previous edition. The control of the old editions of report is under responsibility of client.

SUMMARY

1. TEST PROGRAM 4
2. EQUIPMENT UNDER TEST: CONFIGURATION (DECLARED BY PROVIDER) 5
3. DFS DETECTION THRESHOLDS DETERMINATION, REFERENCE NOISE LEVEL & CHANNEL LOADING 17
4. DYNAMIC FREQUENCY SELECTION (DFS): CHANNEL CLOSING TRANSMISSION TIME & CHANNEL MOVE TIME 23
5. DYNAMIC FREQUENCY SELECTION (DFS): NON-OCCUPANCY PERIOD 27
6. ANNEX : RADAR TEST SIGNAL T0 31
7. UNCERTAINTIES CHART 32

1. TEST PROGRAM

References

- **47 CFR Part 15.407 (DFS requirements)**
- **RSS 247 Issue 1 (DFS requirements)**
- **KDB 905462 D02 UNII DFS Compliance Procedures New Rules v02**
- **KDB 905462 D04 Test Mode New Rules v01**
- **KDB 905462 D03 Client Without DFS New Rules v01r02**
- **KDB 905462 D06 802.11 Channel Plans New Rules v02**
- **KDB 905462 D07 Overview UNII Rules v02**

Radio requirement:

Clause (47CFR Part 15.407 & RSS 247 Issue 1) Test Description	Test result - Comments			
Channel Availability Check Time & DFS Detection Threshold	☐ **PASS**	☐ **FAIL**	☑ **NA(1)(2)**	☐ **NP(3)**
U-NII Detection Bandwidth	☐ **PASS**	☐ **FAIL**	☑ **NA(1)**	☐ **NP(3)**
Statistical Performance Check & DFS Detection Threshold	☐ **PASS**	☐ **FAIL**	☑ **NA(1)**	☐ **NP(3)**
Channel Closing Transmission Time & Channel Move Time	☑ **PASS**	☐ **FAIL**	☐ **NA**	☐ **NP(3)**
Non-occupancy period	☑ **PASS**	☐ **FAIL**	☐ **NA(1)**	☐ **NP(3)**
This table is a summary of test report, see conclusion of each clause of this test report for detail.				

(1): Client without radar detection
(2): Client with radar detection
(3): Limited program

2. EQUIPMENT UNDER TEST: CONFIGURATION (DECLARED BY PROVIDER)

2.1. HARDWARE IDENTIFICATION (EUT AND AUXILIARIES):

Equipment under test (EUT):
COGECO DIW3930 COGECO **Serial Number: 6211130035003**

Power supply:

Name	Type	Rating	Reference / Sn	Comments
Supply1	☑ AC ☐ DC ☐ Battery	100-127Vac; 50/60Hz; 0.3A	NBC12B120100VU / 191636225-xx	-

Inputs/outputs - Cable:

Access	Type	Length used (m)	Declared <3m	Shielded	Under test	Comments
1	Main power supply cable	-	☑	☐	☐	-
2	HDMI cable	-	☑	☐	☐	-
3	USB cable	-	☑	☐	☐	-
4	Ethernet cable	-	☑	☐	☐	-

Auxiliary equipment used during test:

Type	Reference	Sn	Comments
Wireless AC1750 Dual Band Gigabit Cloud Router	DLINK DIR-868L	RZ641E8004888	FCC ID:RRK2012060056-1 IC ID: 4833A-WMCA01A1
Laptop	-	-	Use to set the EUT & the communication traffic
Laptop	-	-	Use to set the EUT & the communication traffic

Equipment information:

Type:	**WIFI**			
Chipset Ref :	BCM72180			
Frequency band:	☑ 5150MHz-5250MHz	☑ 5250MHz-5350MHz	☑ 5470MHz-5725MHz	
	☑ 5725MHz-5850MHz			
Standard:	☑ 802.11a	☑ 802.11n HT20	☑ 802.11n HT40	
	☑ 802.11ac VHT20	☑ 802.11ac VHT40	☑ 802.11ac VHT80	
	☐ 802.11ac VHT160			
Spectrum Modulation:	☑ OFDM			
Channel bandwidth:	☑ 20MHz	☑ 40MHz	☑ 80MHz	☐ 160MHz
Antenna Type:	☑ Integral	☐ External	☐ Dedicated	
Antenna connector:	☑ Yes	☐ No	☐ Temporary for test	
Antenna Requirements §15.203	The transmitter uses an integral antenna with a u.fl connector which is classified as a unique connector			
Transmit chains:	☐ 1	☑ 2	☐ 3	☐ 4
	☐ 5	☐ 6	☐ 7	☐ 8
TPC:	☑ Yes		☐ No	
Receiver chains	☐ 1	☑ 2	☐ 3	☐ 4
	☐ 5	☐ 6	☐ 7	☐ 8
Type of equipment:	☑ Stand-alone	☐ Plug-in	☐ Combined	
Equipment arrangement:	☑ Tabletop	☐ Floor-standing	☐ Multiple orientations	
Operating temperature range:	Tmin:	☐ -20°C	☑ 0°C	☐ X °C
	Tnom:	20°C		
	Tmax:	☐ 35°C	☑ 55°C	☐ X °C
Type of power source:	☑ AC power supply	☐ DC power supply	☐ Battery Battery Type	
Operating voltage range:	Vnom:	☑ 120V/60Hz	☐ X Vdc	
Mode:	☐ Master	☐ Slave with radar detection	☑ Slave without radar detection	
	☐ Bridge		☐ Mesh	
Fixed outdoor P to P/M application:	☐ Yes		☑ No	
System architectures:	☑ IP based		☐ Frame based	
User access restriction:	☑ Yes (The manufacturer declares that information regarding the parameters of the detected Radar Waveforms is not available to the end user)		☐ No	

Antenna Characteristic			
Antenna assembly	**Gain (dBi)**	**Frequency Band (MHz)**	**Impedance(Ω)**
1	1.37	5150-5250	50
	2.76	5250-5875	50
2	1	5150-5250	50
	0.84	5250-5875	50
Accumulated	4.2	5150-5250	50
	4.86	5250-5875	50

Accumulated gain calculation		
Formula used for calculation	**KDB**	**Correlated**
10 log[(10G1 /20 + 10G2 /20 + … + 10GN /20)2 /NANT]dBi	KDB 662911 D01 v02r01	☑ Yes / ☐ No

Hardware information		
Software (if applicable):	**V. :**	1.1000 RC12.0 wl0: Sep 23 2020 13:56:05 version 18.40.16.20 (189d91e10512e80bb2d12b1a62f0685df28f3968 WLTEST) FWID 01-5932f5f2

CHANNEL PLAN		
802.11a / 802.11n HT20/ 802.11ac VHT20		
Channel	**Frequency (MHz)**	**Available Channel**
36	5180	☑
40	5200	☑
44	5220	☑
48	5240	☑
52	5260	☑
56	5280	☑
60	5300	☑
C6=64	5320	☑
C7=100	5500	☑
104	5520	☑
108	5540	☑
112	5560	☑
116	5580	☑
120	5600	☑
124	5620	☑
128	5640	☑
132	5660	☑
136	5680	☑
140	5700	☑
144	5720	☑
149	5745	☑
153	5765	☑
157	5785	☑
161	5805	☑
165	5825	☑

CHANNEL PLAN		
802.11n HT40/ 802.11ac VHT40		
Channel	**Frequency (MHz)**	**Available Channel**
36+40	5190	☑
44+48	5230	☑
52+56	5270	☑
C17=60+64	5310	☑
C18=100+104	5510	☑
108+112	5550	☑
116+120	5590	☑
124+128	5630	☑
132+136	5670	☑
140+144	5710	☑
149+153	5755	☑
157+161	5795	☑

CHANNEL PLAN		
802.11ac VHT80		
Channel	**Frequency (MHz)**	**Available Channel**
36+40+44+48	5210	☑
C25=52+56+60+64	5290	☑
C26=100+104+108+112	5530	☑
116+120+124+128	5610	☑
132+136+140+144	5690	☑
149+153+157+161	5775	☑

No DFS Channel
DFS Channel
Weather DFS Channel (Not Authorised for RSS-247)

DATA RATE		
802.11a		
Data Rate (Mbps)	**Modulation Type**	**Modulation Worst Case**
6	BPSK	☑
9	BPSK	☐
12	QPSK	☐
18	QPSK	☐
24	16-QAM	☐
36	16-QAM	☐
48	64-QAM	☐
54	64-QAM	☐

DATA RATE									
802.11n HT20									
Available for EUT	MCS Index	Spatial streams	Modulation				Data Rate (Mbps)		Worst Case Modulation
							(GI = 800ns)	(GI = 400ns)	
☑	0	1	BPSK				6.5	7.2	☐
	1	1	QPSK				13	14.4	☐
	2	1	QPSK				19.5	21.7	☐
	3	1	16-QAM				26	28.9	☐
	4	1	16-QAM				39	43.3	☐
	5	1	64-QAM				52	57.8	☐
	6	1	64-QAM				58.5	65	☐
	7	1	64-QAM				65	72.2	☐
☑	8	2	BPSK				13	14.4	☑
	9	2	QPSK				26	28.9	☐
	10	2	QPSK				39	43.3	☐
	11	2	16-QAM				52	57.8	☐
	12	2	16-QAM				78	86.7	☐
	13	2	64-QAM				104	115.6	☐
	14	2	64-QAM				117	130.3	☐
	15	2	64-QAM				130	144.4	☐
☐	16	3	BPSK				19.5	21.7	☐
	17	3	QPSK				39	43.3	☐
	18	3	QPSK				58.5	65	☐
	19	3	16-QAM				78	86.7	☐
	20	3	16-QAM				117	130	☐
	21	3	64-QAM				156	173.3	☐
	22	3	64-QAM				175.5	195	☐
	23	3	64-QAM				195	216.7	☐
☐	24	4	BPSK				26	28.9	☐
	25	4	QPSK				52	57.8	☐
	26	4	QPSK				78	86.7	☐
	27	4	16-QAM				104	115.6	☐
	28	4	16-QAM				156	173.3	☐
	29	4	64-QAM				208	231.1	☐
	30	4	64-QAM				234	260	☐
	31	4	64-QAM				260	288.9	☐
☐	32	1	BPSK	-	-	-	-	-	☐
☐	33	2	16-QAM	QPSK	-	-	39	43.3	☐
	34	2	64-QAM	QPSK	-	-	52	57.8	☐
	35	2	64-QAM	16-QAM	-	-	65	72.2	☐
	36	2	16-QAM	QPSK	-	-	58.5	65	☐
	37	2	64-QAM	QPSK	-	-	78	86.7	☐
	38	2	64-QAM	16-QAM	-	-	97.5	108.3	☐
☐	39	3	16-QAM	QPSK	QPSK	-	52	57.8	☐
	40	3	16-QAM	16-QAM	QPSK	-	65	72.2	☐
	41	3	64-QAM	QPSK	QPSK	-	65	72.2	☐
	42	3	64-QAM	16-QAM	QPSK	-	78	86.7	☐
	43	3	64-QAM	16-QAM	16-QAM	-	91	101.1	☐
	44	3	64-QAM	64-QAM	QPSK	-	91	101.1	☐
	45	3	64-QAM	64-QAM	16-QAM	-	104	115.6	☐
	46	3	16-QAM	QPSK	QPSK	-	78	86.7	☐
	47	3	16-QAM	16-QAM	QPSK	-	97.5	108.3	☐
	48	3	64-QAM	QPSK	QPSK	-	97.5	108.3	☐
	49	3	64-QAM	16-QAM	QPSK	-	117	130	☐
	50	3	64-QAM	16-QAM	16-QAM	-	136.5	151.7	☐
	51	3	64-QAM	64-QAM	QPSK	-	136.5	151.7	☐
	52	3	64-QAM	64-QAM	16-QAM	-	156	173.3	☐
☐	53	4	16-QAM	QPSK	QPSK	QPSK	65	72.2	☐
	54	4	16-QAM	16-QAM	QPSK	QPSK	78	86.7	☐
	55	4	16-QAM	16-QAM	16-QAM	QPSK	91	101.1	☐
	56	4	64-QAM	QPSK	QPSK	QPSK	78	86.7	☐
	57	4	64-QAM	16-QAM	QPSK	QPSK	91	101.1	☐
	58	4	64-QAM	16-QAM	16-QAM	QPSK	104	115.6	☐
	59	4	64-QAM	16-QAM	16-QAM	16-QAM	117	130	☐
	60	4	64-QAM	QPSK	QPSK	QPSK	104	115.6	☐
	61	4	64-QAM	16-QAM	16-QAM	QPSK	117	130	☐
	62	4	64-QAM	16-QAM	16-QAM	16-QAM	130	144.4	☐
	63	4	64-QAM	64-QAM	64-QAM	QPSK	130	144.4	☐
	64	4	64-QAM	64-QAM	64-QAM	16-QAM	143	158.9	☐
	65	4	16-QAM	QPSK	QPSK	QPSK	97.5	108.3	☐
	66	4	16-QAM	16-QAM	QPSK	QPSK	117	130	☐
	67	4	16-QAM	16-QAM	16-QAM	QPSK	136.5	151.7	☐
	68	4	64-QAM	QPSK	QPSK	QPSK	117	130	☐
	69	4	64-QAM	16-QAM	QPSK	QPSK	136.5	151.7	☐
	70	4	64-QAM	16-QAM	16-QAM	QPSK	156	173.3	☐
	71	4	64-QAM	16-QAM	16-QAM	16-QAM	175.5	195	☐
	72	4	64-QAM	64-QAM	QPSK	QPSK	156	173.3	☐
	73	4	64-QAM	64-QAM	16-QAM	QPSK	175.5	195	☐
	74	4	64-QAM	64-QAM	16-QAM	16-QAM	195	216.7	☐
	75	4	64-QAM	64-QAM	64-QAM	QPSK	195	216.7	☐
	76	4	64-QAM	64-QAM	64-QAM	16-QAM	214.5	238.3	☐

DATA RATE									
802.11n HT40									
Available for EUT	MCS Index	Spatial streams	Modulation				Data Rate (Mbps)		Worst Case Modulation
							(GI = 800ns)	(GI = 400ns)	
☑	0	1	BPSK				13	15	☐
	1	1	QPSK				27	30	☐
	2	1	QPSK				40.5	45	☐
	3	1	16-QAM				54	60	☐
	4	1	16-QAM				81	90	☐
	5	1	64-QAM				108	120	☐
	6	1	64-QAM				121.5	135	☐
	7	1	64-QAM				135	150	☐
☑	8	2	BPSK				27	30	☑
	9	2	QPSK				54	60	☐
	10	2	QPSK				81	90	☐
	11	2	16-QAM				108	120	☐
	12	2	16-QAM				162	180	☐
	13	2	64-QAM				216	240	☐
	14	2	64-QAM				243	270	☐
	15	2	64-QAM				270	300	☐
☐	16	3	BPSK				40.5	45	☐
	17	3	QPSK				81	90	☐
	18	3	QPSK				121.5	135	☐
	19	3	16-QAM				162	180	☐
	20	3	16-QAM				243	270	☐
	21	3	64-QAM				324	360	☐
	22	3	64-QAM				364.5	405	☐
	23	3	64-QAM				405	450	☐
☐	24	4	BPSK				54	60	☐
	25	4	QPSK				108	120	☐
	26	4	QPSK				162	180	☐
	27	4	16-QAM				216	240	☐
	28	4	16-QAM				324	360	☐
	29	4	64-QAM				432	480	☐
	30	4	64-QAM				486	540	☐
	31	4	64-QAM				540	600	☐
☐	32	1	BPSK	-	-	-	6.0	6.7	☐
☐	33	2	16-QAM	QPSK	-	-	81	90.0	☐
	34	2	64-QAM	QPSK	-	-	108	120	☐
	35	2	64-QAM	16-QAM	-	-	135	150	☐
	36	2	16-QAM	QPSK	-	-	121.5	135	☐
	37	2	64-QAM	QPSK	-	-	162	180	☐
	38	2	64-QAM	16-QAM	-	-	202.5	225	☐
☐	39	3	16-QAM	QPSK	QPSK	-	108	120	☐
	40	3	16-QAM	16-QAM	QPSK	-	135	150	☐
	41	3	64-QAM	QPSK	QPSK	-	135	150	☐
	42	3	64-QAM	16-QAM	QPSK	-	162	180	☐
	43	3	64-QAM	16-QAM	16-QAM	-	189	210	☐
	44	3	64-QAM	64-QAM	QPSK	-	189	210	☐
	45	3	64-QAM	64-QAM	16-QAM	-	216	240	☐
	46	3	16-QAM	QPSK	QPSK	-	162	180	☐
	47	3	16-QAM	16-QAM	QPSK	-	202.5	225	☐
	48	3	64-QAM	QPSK	QPSK	-	202.5	225	☐
	49	3	64-QAM	16-QAM	QPSK	-	243	270	☐
	50	3	64-QAM	16-QAM	16-QAM	-	283.5	315	☐
	51	3	64-QAM	64-QAM	QPSK	-	283.5	315	☐
	52	3	64-QAM	64-QAM	16-QAM	-	324	360	☐
☐	53	4	16-QAM	QPSK	QPSK	QPSK	135	150	☐
	54	4	16-QAM	16-QAM	QPSK	QPSK	162	180	☐
	55	4	16-QAM	16-QAM	16-QAM	QPSK	189	210	☐
	56	4	64-QAM	QPSK	QPSK	QPSK	162	180	☐
	57	4	64-QAM	16-QAM	QPSK	QPSK	189	210	☐
	58	4	64-QAM	16-QAM	16-QAM	QPSK	216	240	☐
	59	4	64-QAM	16-QAM	16-QAM	16-QAM	243	270	☐
	60	4	64-QAM	QPSK	QPSK	QPSK	216	240	☐
	61	4	64-QAM	16-QAM	16-QAM	QPSK	243	270	☐
	62	4	64-QAM	16-QAM	16-QAM	16-QAM	270	300	☐
	63	4	64-QAM	64-QAM	64-QAM	QPSK	270	300	☐
	64	4	64-QAM	64-QAM	64-QAM	16-QAM	297	330	☐
	65	4	16-QAM	QPSK	QPSK	QPSK	202.5	225	☐
	66	4	16-QAM	16-QAM	QPSK	QPSK	243	270	☐
	67	4	16-QAM	16-QAM	16-QAM	QPSK	283.5	315	☐
	68	4	64-QAM	QPSK	QPSK	QPSK	243	270	☐
	69	4	64-QAM	16-QAM	QPSK	QPSK	283.5	315	☐
	70	4	64-QAM	16-QAM	16-QAM	QPSK	324	360	☐
	71	4	64-QAM	16-QAM	16-QAM	16-QAM	364.5	405	☐
	72	4	64-QAM	64-QAM	QPSK	QPSK	324	360	☐
	73	4	64-QAM	64-QAM	16-QAM	QPSK	364.5	405	☐
	74	4	64-QAM	64-QAM	16-QAM	16-QAM	405	450	☐
	75	4	64-QAM	64-QAM	64-QAM	QPSK	405	450	☐
	76	4	64-QAM	64-QAM	64-QAM	16-QAM	445.5	495	☐

DATA RATE: 802.11ac VHT20							
Available for EUT	MCS Index	Nbr of spatial streams	Modulation (Stream 1/2/3/4)	Coding rate	GI = 800ns	GI = 400ns	Worst Case Modulation
☑	0	1	BPSK	1/2	6,5	7,2	☐
	1	1	QPSK	1/2	13	14,4	☐
	2	1	QPSK	3/4	19,5	21,7	☐
	3	1	16-QAM	1/2	26	28,9	☐
	4	1	16-QAM	3/4	39	43,3	☐
	5	1	64-QAM	2/3	52	57,8	☐
	6	1	64-QAM	3/4	58,5	65	☐
	7	1	64-QAM	5/6	65	72,2	☐
	8	1	256-QAM	3/4	78	86,7	☐
	9	1	256-QAM	5/6	N/A	N/A	☐
☑	10	2	BPSK	1/2	13	14,4	☐
	11	2	QPSK	1/2	26	28,8	☐
	12	2	QPSK	3/4	39	43,4	☐
	13	2	16-QAM	1/2	52	57,8	☐
	14	2	16-QAM	3/4	78	86,6	☐
	15	2	64-QAM	2/3	104	115,6	☐
	16	2	64-QAM	3/4	117	130	☐
	17	2	64-QAM	5/6	130	144,4	☐
	18	2	256-QAM	3/4	156	173,4	☐
	19	2	256-QAM	5/6	N/A	N/A	☐
☐	20	3	BPSK	1/2	19,5	21,6	☐
	21	3	QPSK	1/2	39	43,2	☐
	22	3	QPSK	3/4	58,5	65,1	☐
	23	3	16-QAM	1/2	78	86,7	☐
	24	3	16-QAM	3/4	117	129,9	☐
	25	3	64-QAM	2/3	156	173,4	☐
	26	3	64-QAM	3/4	175,5	195	☐
	27	3	64-QAM	5/6	195	216,6	☐
	28	3	256-QAM	3/4	234	260,1	☐
	29	3	256-QAM	5/6	N/A	N/A	☐
☐	30	4	BPSK	1/2	26	28,8	☐
	31	4	QPSK	1/2	52	57,6	☐
	32	4	QPSK	3/4	78	86,8	☐
	33	4	16-QAM	1/2	104	115,6	☐
	34	4	16-QAM	3/4	156	173,2	☐
	35	4	64-QAM	2/3	208	231,2	☐
	36	4	64-QAM	3/4	234	260	☐
	37	4	64-QAM	5/6	260	288,8	☐
	38	4	256-QAM	3/4	312	346,8	☐
	39	4	256-QAM	5/6	N/A	N/A	☐
☐	40	5	BPSK	1/2	32,5	36	☐
	41	5	QPSK	1/2	65	72	☐
	42	5	QPSK	3/4	97,5	108,5	☐
	43	5	16-QAM	1/2	130	144,5	☐
	44	5	16-QAM	3/4	195	216,5	☐
	45	5	64-QAM	2/3	260	289	☐
	46	5	64-QAM	3/4	292,5	325	☐
	47	5	64-QAM	5/6	325	361	☐
	48	5	256-QAM	3/4	390	433,5	☐
	49	5	256-QAM	5/6	N/A	N/A	☐
☐	50	6	BPSK	1/2	39	43,2	☐
	51	6	QPSK	1/2	78	86,4	☐
	52	6	QPSK	3/4	117	130,2	☐
	53	6	16-QAM	1/2	156	173,4	☐
	54	6	16-QAM	3/4	234	259,8	☐
	55	6	64-QAM	2/3	312	346,8	☐
	56	6	64-QAM	3/4	351	390	☐
	57	6	64-QAM	5/6	390	433,2	☐
	58	6	256-QAM	3/4	468	520,2	☐
	59	6	256-QAM	5/6	N/A	N/A	☐
☐	60	7	BPSK	1/2	45,5	50,4	☐
	61	7	QPSK	1/2	91	100,8	☐
	62	7	QPSK	3/4	136,5	151,9	☐
	63	7	16-QAM	1/2	182	202,3	☐
	64	7	16-QAM	3/4	273	303,1	☐
	65	7	64-QAM	2/3	364	404,6	☐
	66	7	64-QAM	3/4	409,5	455	☐
	67	7	64-QAM	5/6	455	505,4	☐
	68	7	256-QAM	3/4	546	606,9	☐
	69	7	256-QAM	5/6	N/A	N/A	☐
☐	70	8	BPSK	1/2	52	57,6	☐
	71	8	QPSK	1/2	104	115,2	☐
	72	8	QPSK	3/4	156	173,6	☐
	73	8	16-QAM	1/2	208	231,2	☐
	74	8	16-QAM	3/4	312	346,4	☐
	75	8	64-QAM	2/3	416	462,4	☐
	76	8	64-QAM	3/4	468	520	☐
	77	8	64-QAM	5/6	520	577,6	☐
	78	8	256-QAM	3/4	624	693,6	☐
	79	8	256-QAM	5/6	N/A	N/A	☐

DATA RATE: 802.11ac VHT40							
Available for EUT	MCS Index	Nbr of spatial streams	Modulation (Stream 1/2/3/4)	Coding rate	GI = 800ns	GI = 400ns	Worst Case Modulation
☑	0	1	BPSK	1/2	13,5	15	☐
	1	1	QPSK	1/2	27	30	☐
	2	1	QPSK	3/4	40,5	45	☐
	3	1	16-QAM	1/2	54	60	☐
	4	1	16-QAM	3/4	81	90	☐
	5	1	64-QAM	2/3	108	120	☐
	6	1	64-QAM	3/4	121,5	135	☐
	7	1	64-QAM	5/6	135	150	☐
	8	1	256-QAM	3/4	162	180	☐
	9	1	256-QAM	5/6	180	200	☐
☑	10	2	BPSK	1/2	27	30	☐
	11	2	QPSK	1/2	54	60	☐
	12	2	QPSK	3/4	81	90	☐
	13	2	16-QAM	1/2	108	120	☐
	14	2	16-QAM	3/4	162	180	☐
	15	2	64-QAM	2/3	216	240	☐
	16	2	64-QAM	3/4	243	270	☐
	17	2	64-QAM	5/6	270	300	☐
	18	2	256-QAM	3/4	324	360	☐
	19	2	256-QAM	5/6	360	400	☐
☐	20	3	BPSK	1/2	40,5	45	☐
	21	3	QPSK	1/2	81	90	☐
	22	3	QPSK	3/4	121,5	135	☐
	23	3	16-QAM	1/2	162	180	☐
	24	3	16-QAM	3/4	243	270	☐
	25	3	64-QAM	2/3	324	360	☐
	26	3	64-QAM	3/4	364,5	405	☐
	27	3	64-QAM	5/6	405	450	☐
	28	3	256-QAM	3/4	486	540	☐
	29	3	256-QAM	5/6	540	600	☐
☐	30	4	BPSK	1/2	54	60	☐
	31	4	QPSK	1/2	108	120	☐
	32	4	QPSK	3/4	162	180	☐
	33	4	16-QAM	1/2	216	240	☐
	34	4	16-QAM	3/4	324	360	☐
	35	4	64-QAM	2/3	432	480	☐
	36	4	64-QAM	3/4	486	540	☐
	37	4	64-QAM	5/6	540	600	☐
	38	4	256-QAM	3/4	648	720	☐
	39	4	256-QAM	5/6	720	800	☐
☐	40	5	BPSK	1/2	67,5	75	☐
	41	5	QPSK	1/2	135	150	☐
	42	5	QPSK	3/4	202,5	225	☐
	43	5	16-QAM	1/2	270	300	☐
	44	5	16-QAM	3/4	405	450	☐
	45	5	64-QAM	2/3	540	600	☐
	46	5	64-QAM	3/4	607,5	675	☐
	47	5	64-QAM	5/6	675	750	☐
	48	5	256-QAM	3/4	810	900	☐
	49	5	256-QAM	5/6	900	1000	☐
☐	50	6	BPSK	1/2	81	90	☐
	51	6	QPSK	1/2	162	180	☐
	52	6	QPSK	3/4	243	270	☐
	53	6	16-QAM	1/2	324	360	☐
	54	6	16-QAM	3/4	486	540	☐
	55	6	64-QAM	2/3	648	720	☐
	56	6	64-QAM	3/4	729	810	☐
	57	6	64-QAM	5/6	810	900	☐
	58	6	256-QAM	3/4	972	1080	☐
	59	6	256-QAM	5/6	1080	1200	☐
☐	60	7	BPSK	1/2	94,5	105	☐
	61	7	QPSK	1/2	189	210	☐
	62	7	QPSK	3/4	283,5	315	☐
	63	7	16-QAM	1/2	378	420	☐
	64	7	16-QAM	3/4	567	630	☐
	65	7	64-QAM	2/3	756	840	☐
	66	7	64-QAM	3/4	850,5	945	☐
	67	7	64-QAM	5/6	945	1050	☐
	68	7	256-QAM	3/4	1134	1260	☐
	69	7	256-QAM	5/6	1260	1400	☐
☐	70	8	BPSK	1/2	108	120	☐
	71	8	QPSK	1/2	216	240	☐
	72	8	QPSK	3/4	324	360	☐
	73	8	16-QAM	1/2	432	480	☐
	74	8	16-QAM	3/4	648	720	☐
	75	8	64-QAM	2/3	864	960	☐
	76	8	64-QAM	3/4	972	1080	☐
	77	8	64-QAM	5/6	1080	1200	☐
	78	8	256-QAM	3/4	1296	1440	☐
	79	8	256-QAM	5/6	1440	1600	☐

DATA RATE: 802.11ac VHT80							
Available for EUT	MCS Index	Nbr of spatial streams	Modulation (Stream 1/2/3/4)	Coding rate	GI = 800ns	GI = 400ns	Worst Case Modulation
☑	0	1	BPSK	1/2	29.3	32.5	☐
	1	1	QPSK	1/2	58.5	65	☐
	2	1	QPSK	3/4	87.8	97.5	☐
	3	1	16-QAM	1/2	117	130	☐
	4	1	16-QAM	3/4	175.5	195	☐
	5	1	64-QAM	2/3	234	260	☐
	6	1	64-QAM	3/4	263.3	292.5	☐
	7	1	64-QAM	5/6	292.5	325	☐
	8	1	256-QAM	3/4	351	390	☐
	9	1	256-QAM	5/6	390	433.3	☐
☑	10	2	BPSK	1/2	58.6	65	☑
	11	2	QPSK	1/2	117	130	☐
	12	2	QPSK	3/4	175.6	195	☐
	13	2	16-QAM	1/2	234	260	☐
	14	2	16-QAM	3/4	351	390	☐
	15	2	64-QAM	2/3	468	520	☐
	16	2	64-QAM	3/4	526.6	585	☐
	17	2	64-QAM	5/6	585	650	☐
	18	2	256-QAM	3/4	702	780	☐
	19	2	256-QAM	5/6	780	866.6	☐
☐	20	3	BPSK	1/2	87.9	97.5	☐
	21	3	QPSK	1/2	175.5	195	☐
	22	3	QPSK	3/4	263.4	292.5	☐
	23	3	16-QAM	1/2	351	390	☐
	24	3	16-QAM	3/4	526.5	585	☐
	25	3	64-QAM	2/3	702	780	☐
	26	3	64-QAM	3/4	789.9	877.5	☐
	27	3	64-QAM	5/6	877.5	975	☐
	28	3	256-QAM	3/4	1053	1170	☐
	29	3	256-QAM	5/6	1170	1299.9	☐
☐	30	4	BPSK	1/2	117.2	130	☐
	31	4	QPSK	1/2	234	260	☐
	32	4	QPSK	3/4	351.2	390	☐
	33	4	16-QAM	1/2	468	520	☐
	34	4	16-QAM	3/4	702	780	☐
	35	4	64-QAM	2/3	936	1040	☐
	36	4	64-QAM	3/4	1053.2	1170	☐
	37	4	64-QAM	5/6	1170	1300	☐
	38	4	256-QAM	3/4	1404	1560	☐
	39	4	256-QAM	5/6	1560	1733.2	☐
☐	40	5	BPSK	1/2	146.5	162.5	☐
	41	5	QPSK	1/2	292.5	325	☐
	42	5	QPSK	3/4	439	487.5	☐
	43	5	16-QAM	1/2	585	650	☐
	44	5	16-QAM	3/4	877.5	975	☐
	45	5	64-QAM	2/3	1170	1300	☐
	46	5	64-QAM	3/4	1316.5	1462.5	☐
	47	5	64-QAM	5/6	1462.5	1625	☐
	48	5	256-QAM	3/4	1755	1950	☐
	49	5	256-QAM	5/6	1950	2166.5	☐
☐	50	6	BPSK	1/2	175.8	195	☐
	51	6	QPSK	1/2	351	390	☐
	52	6	QPSK	3/4	526.8	585	☐
	53	6	16-QAM	1/2	702	780	☐
	54	6	16-QAM	3/4	1053	1170	☐
	55	6	64-QAM	2/3	1404	1560	☐
	56	6	64-QAM	3/4	1579.8	1755	☐
	57	6	64-QAM	5/6	1755	1950	☐
	58	6	256-QAM	3/4	2106	2340	☐
	59	6	256-QAM	5/6	2340	2599.8	☐
☐	60	7	BPSK	1/2	205.1	227.5	☐
	61	7	QPSK	1/2	409.5	455	☐
	62	7	QPSK	3/4	614.6	682.5	☐
	63	7	16-QAM	1/2	819	910	☐
	64	7	16-QAM	3/4	1228.5	1365	☐
	65	7	64-QAM	2/3	1638	1820	☐
	66	7	64-QAM	3/4	1843.1	2047.5	☐
	67	7	64-QAM	5/6	2047.5	2275	☐
	68	7	256-QAM	3/4	2457	2730	☐
	69	7	256-QAM	5/6	2730	3033.1	☐
☐	70	8	BPSK	1/2	234.4	260	☐
	71	8	QPSK	1/2	468	520	☐
	72	8	QPSK	3/4	702.4	780	☐
	73	8	16-QAM	1/2	936	1040	☐
	74	8	16-QAM	3/4	1404	1560	☐
	75	8	64-QAM	2/3	1872	2080	☐
	76	8	64-QAM	3/4	2106.4	2340	☐
	77	8	64-QAM	5/6	2340	2600	☐
	78	8	256-QAM	3/4	2808	3120	☐
	79	8	256-QAM	5/6	3120	3466.4	☐

2.2. RUNNING MODE

Test mode	Description of test mode
Test mode 1	Emission-reception with a duty cycle above 17% in the data rate that produced the highest output power and Iperf traffic in udp mode(1)

(1) System testings is performed with iperf test software in udp mode from the Master Device to the Client Device on the test channel. The data traffic is performed Laptop 2 to Laptop 1

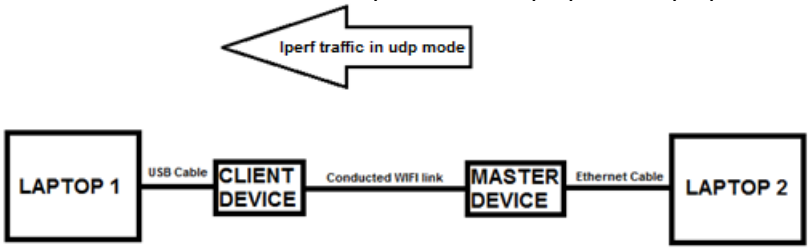

Test	Running mode
Channel Closing Transmission Time & Channel Move Time	☑ Test mode 1 ☐ Alternative test mode()

2.3. EQUIPMENT LABELLING

2.4. EQUIPMENT MODIFICATION

☑ None ☐ Modification:

3. DFS DETECTION THRESHOLDS DETERMINATION, REFERENCE NOISE LEVEL & CHANNEL LOADING

3.1. TEST CONDITIONS

Test performed by	: Armand MAHOUNGOU
Date of test	: July 5, 2021
Ambient temperature	: 21 °C
Relative humidity	: 44 %

3.2. TEST SETUP

- The Equipment Under Test is:
☑ On a table
☐ In an anechoic chamber

- Measurement is performed with a spectrum analyzer:
☑ On the EUT conducted access
☐ On the EUT with a test fixture

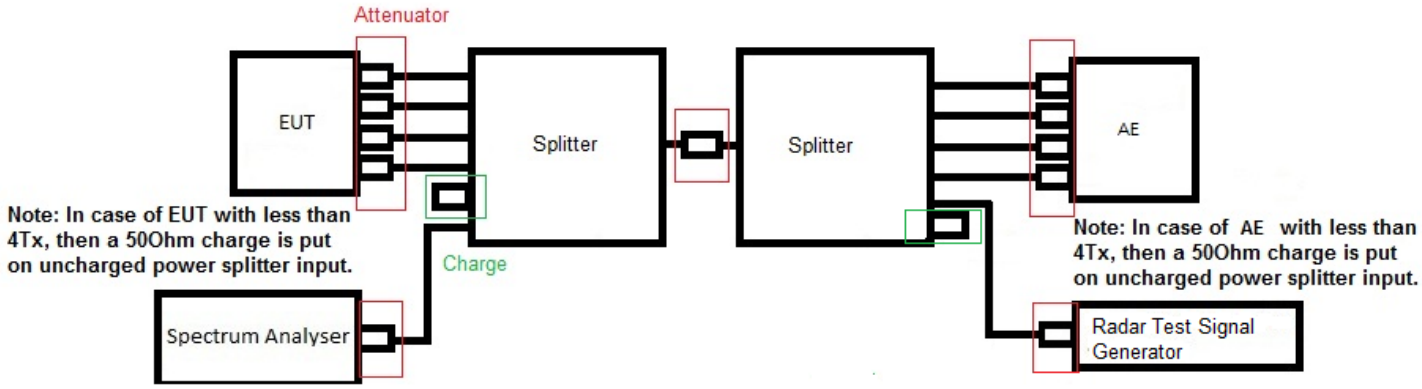

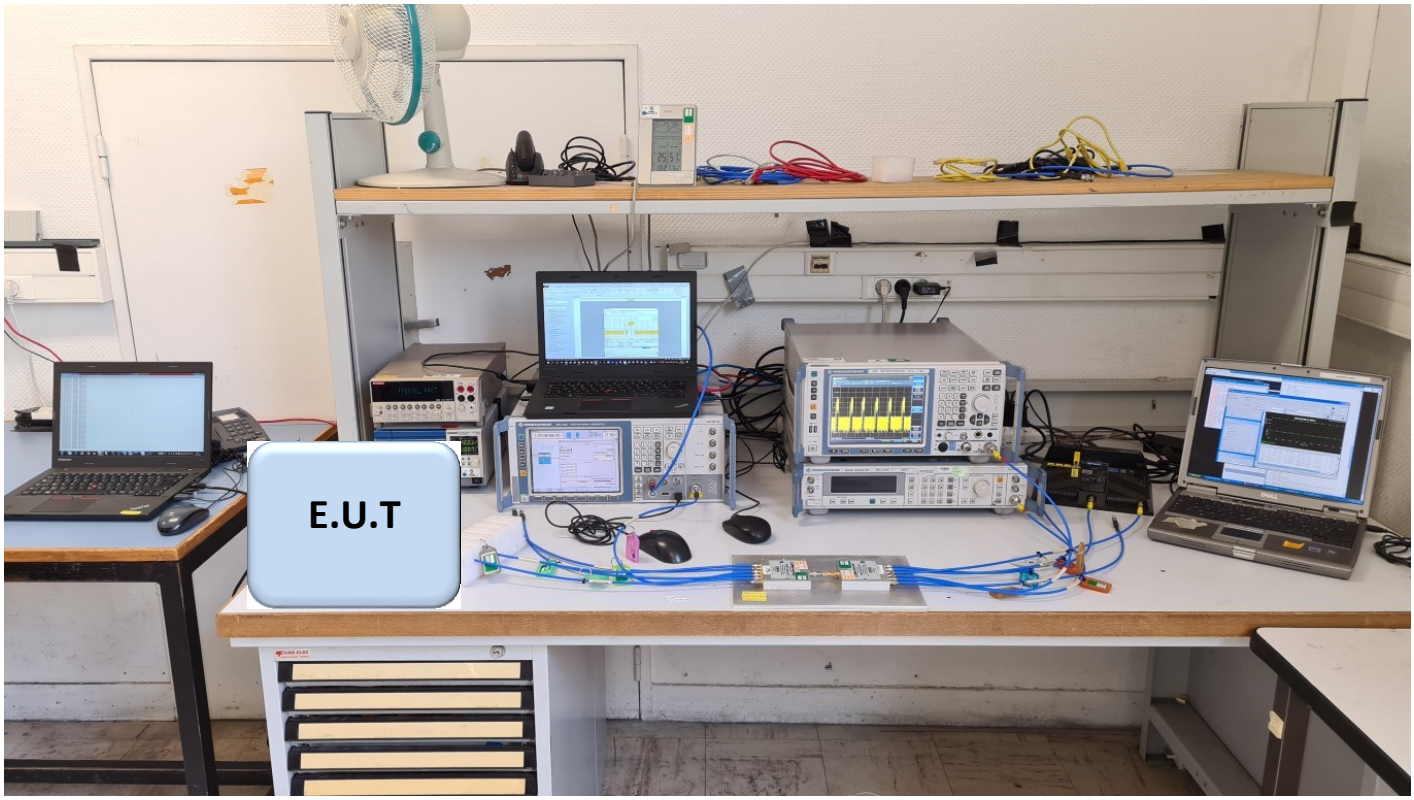

Photograph for DFS Detection Thresholds Determination, Reference Noise Level, Channel Loading

3.3. TEST EQUIPMENT LIST

DESCRIPTION	MANUFACTURER	MODEL	N° LCIE	Cal_Date	Cal_Due
R&S Commander Software	ROHDE & SCHWARZ	Version 1.6.4	-	-	-
Power supply	KIKUSUI	PCR500M	A7040079	Calibrate with multimeter	Calibrate with multimeter
Multimeter	KEITHLEY	2000	A1242090	2019/05	2021/05
EMI receiver	ROHDE & SCHWARZ	ESR 7	A2642026	2019/07	2021/07
Signal generator	ROHDE & SCHWARZ	SMJ100A	A5444007	2021/03	2022/03
RF cable	Télédyne	920-0202-024	A5329663	2020/09	2022/09
RF cable	Télédyne	920-0202-024	A5329664	2020/09	2022/09
RF cable	Télédyne	920-0202-024	A5329665	2020/09	2022/09
RF cable	Télédyne	920-0202-024	A5329668	2020/09	2022/09
RF cable	Télédyne	920-0202-024	A5329669	2020/09	2022/09
RF cable	Télédyne	920-0202-024	A5329670	2020/09	2022/09
RF cable	Télédyne	920-0202-024	A5329672	2020/09	2022/09
RF cable	Télédyne	920-0202-024	A5329673	2020/09	2022/09
Attenuator 10dB	MINI CIRCUITS	BW-S10W2+	A7122229	2020/09	2022/09
Attenuator 10dB	MINI CIRCUITS	BW-S10W2+	A7122230	2020/09	2022/09
Attenuator 3dB	MINI CIRCUITS	BW-S3W2+	A7122238	2020/09	2022/09
Attenuator 3dB	MINI CIRCUITS	BW-S3W2+	A7122239	2020/09	2022/09
Attenuator 3dB	MINI CIRCUITS	BW-S3W2+	A7122240	2020/09	2022/09
Attenuator 3dB	MINI CIRCUITS	BW-S3W2+	A7122241	2020/09	2022/09
Attenuator 3dB	MINI CIRCUITS	BW-S3W2+	A7122242	2020/09	2022/09
Attenuator 3dB	MINI CIRCUITS	BW-S3W2+	A7122243	2020/09	2022/09
Power splitter	Mini-Circuits	ZN6PD-63W-S+	A7132040	2020/09	2022/09
Power splitter	Mini-Circuits	ZN6PD-63W-S+	A7132041	2020/09	2022/09
Load 50 ohms	Fairview Microwave	ST0635F	A7152075	2020/09	2022/09
Load 50 ohms	Fairview Microwave	ST0635F	A7152076	2020/09	2022/09
Load 50 ohms	Fairview Microwave	ST0635F	A7152077	2020/09	2022/09
Load 50 ohms	Fairview Microwave	ST0635F	A7152078	2020/09	2022/09

Note: In our quality system, the test equipment calibration due is more & less 2 months

3.4. RESULTS

DFS Detection Thresholds Calibration
C25
Type 0

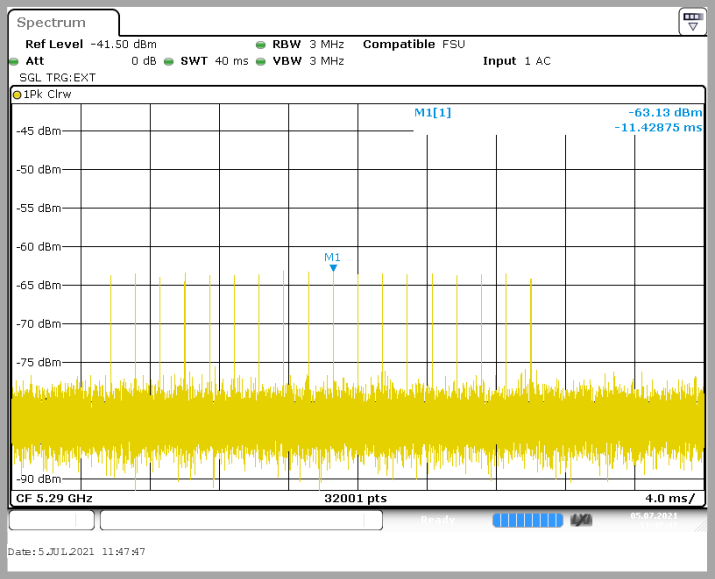

Channel	C25
EIRP (See test report from FCC ID: RRK2012060056-1)	338,065mW
DFS Detection thresholds applied	-64dBm
Additional Level (dB)	1
DFS Detection thresholds applied	-63dBm

Reference Noise Level
C25

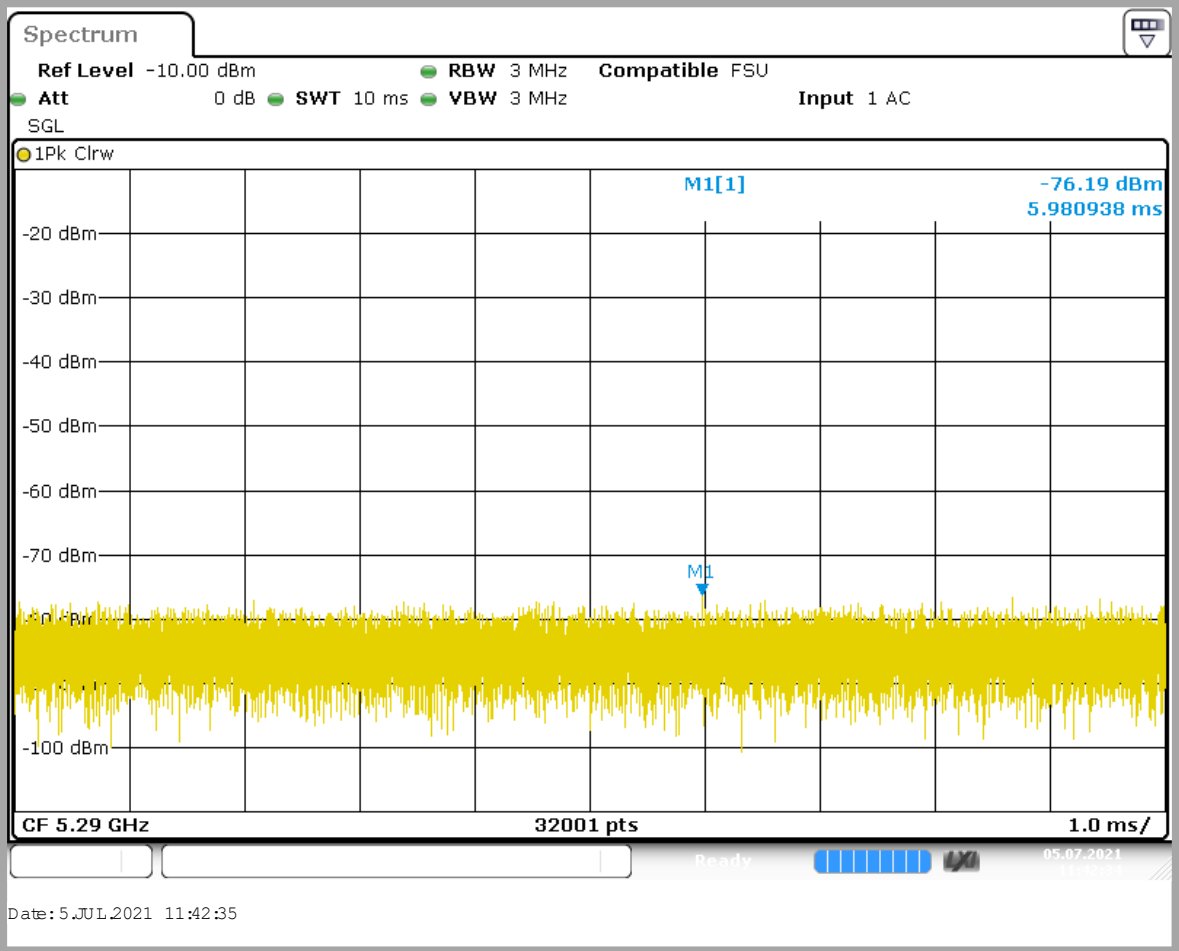

Client Level	
C25	
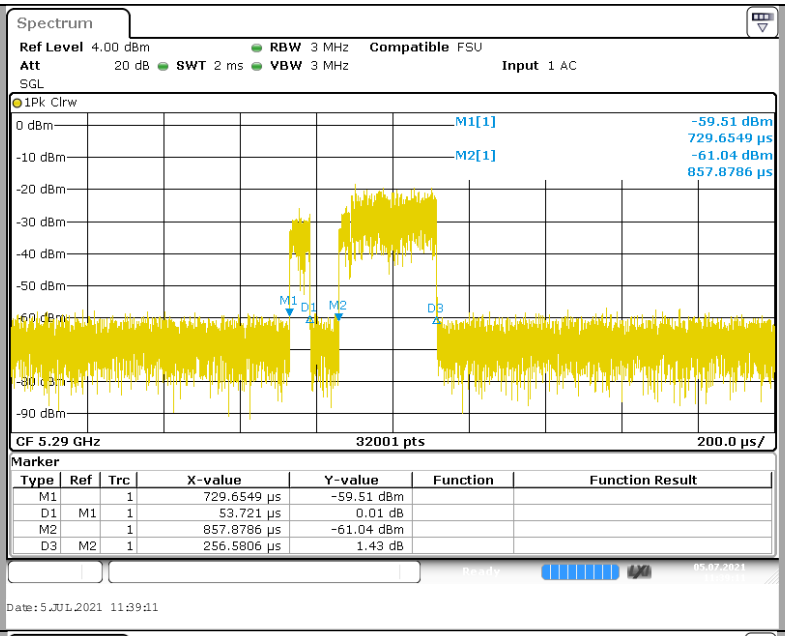	
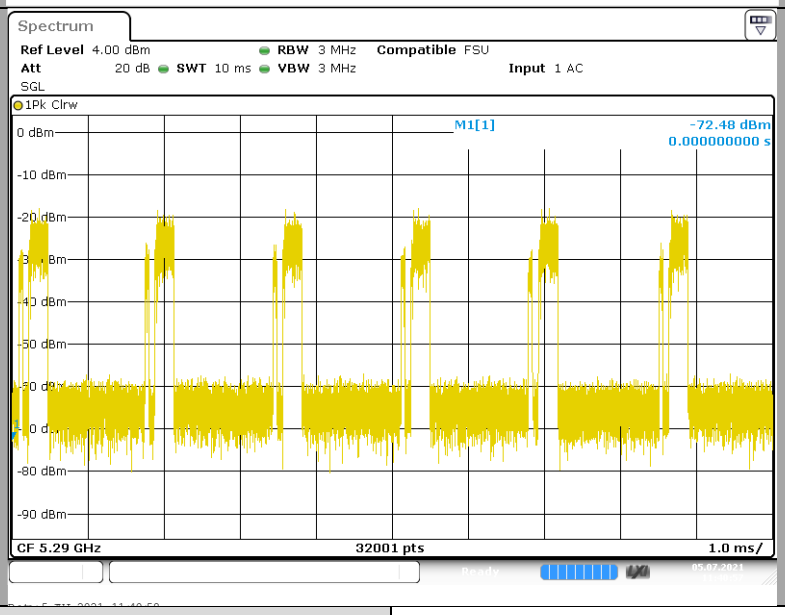	
Duty Cycle (%)	Over 17%

4. DYNAMIC FREQUENCY SELECTION (DFS): CHANNEL CLOSING TRANSMISSION TIME & CHANNEL MOVE TIME

4.1. TEST CONDITIONS

Test performed by	: Armand MAHOUNGOU
Date of test	: July 5, 2021
Ambient temperature	: 21 °C
Relative humidity	: 44 %

4.2. TEST SETUP

- The Equipment Under Test is:
☑ On a table
☐ In an anechoic chamber

- Measurement is performed with a spectrum analyzer:
☑ On the EUT conducted access
☐ On the EUT with a test fixture

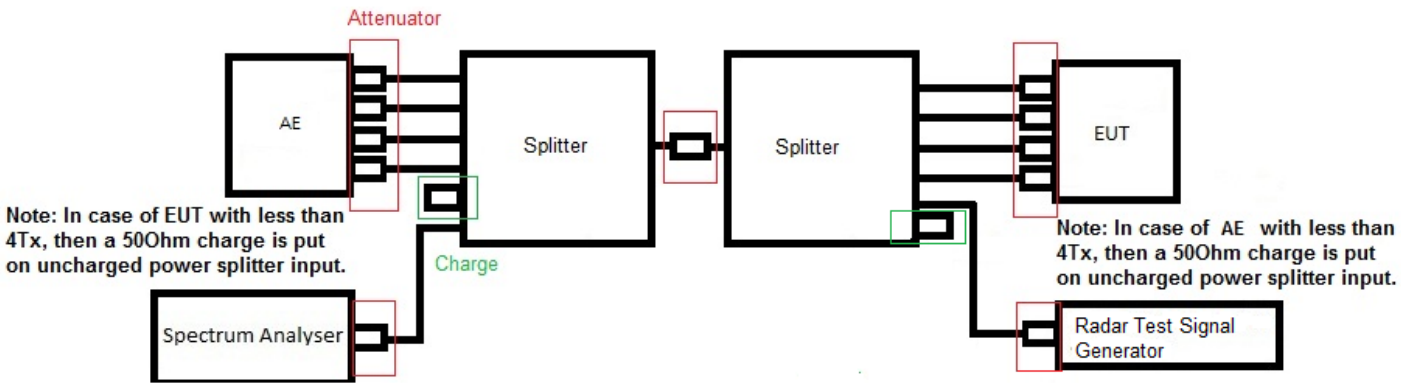

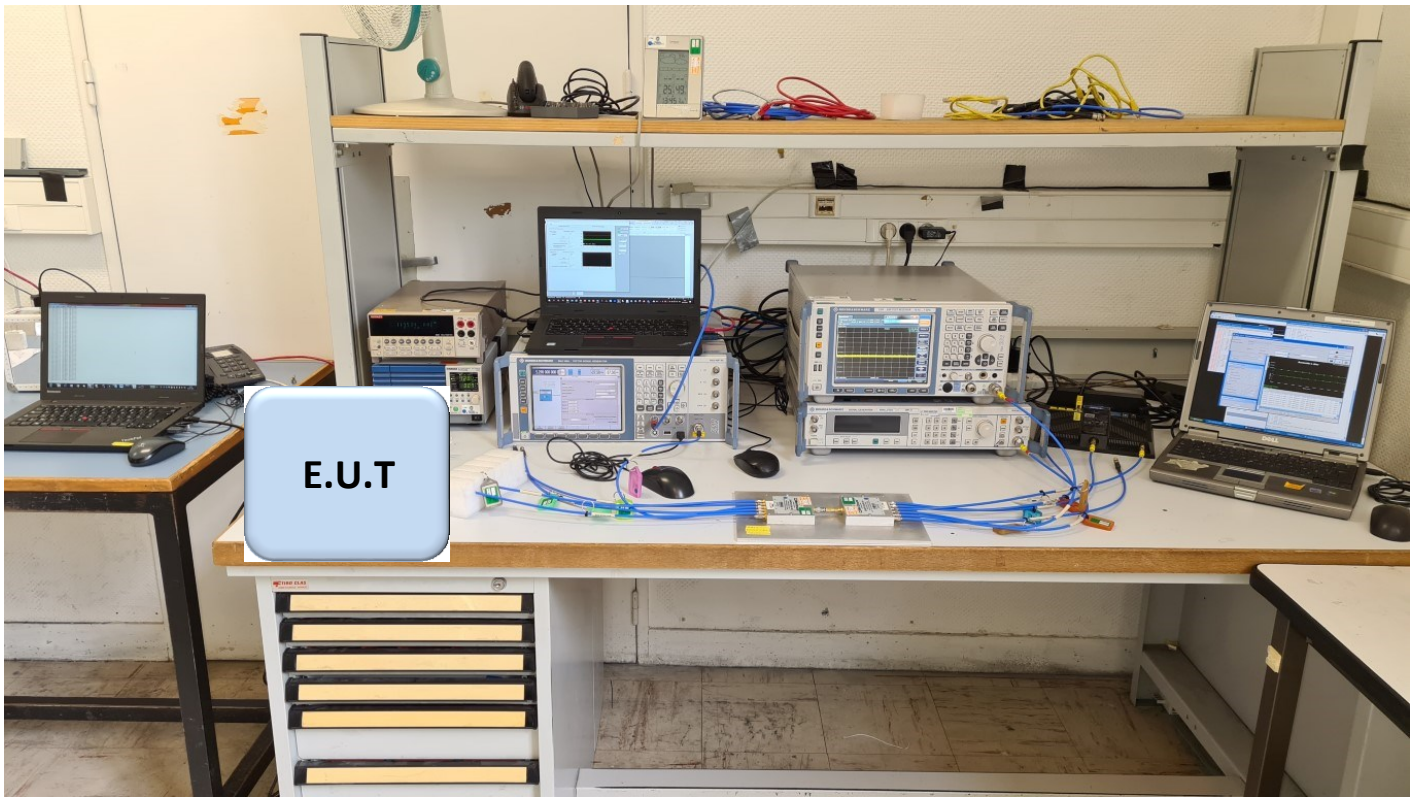

Photograph for DFS Channel Closing Transmission Time & Channel Move Time

4.3. LIMIT

Channel Closing Transmission Time shall not exceed 0.26second
Channel Move Time shall not exceed 10seconds

4.4. TEST EQUIPMENT LIST

DESCRIPTION	MANUFACTURER	MODEL	N° LCIE	Cal_Date	Cal_Due
R&S Commander Software	ROHDE & SCHWARZ	Version 1.6.4	-	-	-
DFS Analysis Tool	ROHDE & SCHWARZ	Version 11.2006 – 1EF59_1E	-	-	-
Power supply	KIKUSUI	PCR500M	A7040079	Calibrate with multimeter	Calibrate with multimeter
Multimeter	KEITHLEY	2000	A1242090	2019/05	2021/05
EMI receiver	ROHDE & SCHWARZ	ESR 7	A2642026	2019/07	2021/07
Signal generator	ROHDE & SCHWARZ	SMJ100A	A5444007	2021/03	2022/03
RF cable	Télédyne	920-0202-024	A5329663	2020/09	2022/09
RF cable	Télédyne	920-0202-024	A5329664	2020/09	2022/09
RF cable	Télédyne	920-0202-024	A5329665	2020/09	2022/09
RF cable	Télédyne	920-0202-024	A5329668	2020/09	2022/09
RF cable	Télédyne	920-0202-024	A5329669	2020/09	2022/09
RF cable	Télédyne	920-0202-024	A5329670	2020/09	2022/09
RF cable	Télédyne	920-0202-024	A5329672	2020/09	2022/09
RF cable	Télédyne	920-0202-024	A5329673	2020/09	2022/09
Attenuator 10dB	MINI CIRCUITS	BW-S10W2+	A7122229	2020/09	2022/09
Attenuator 10dB	MINI CIRCUITS	BW-S10W2+	A7122230	2020/09	2022/09
Attenuator 3dB	MINI CIRCUITS	BW-S3W2+	A7122238	2020/09	2022/09
Attenuator 3dB	MINI CIRCUITS	BW-S3W2+	A7122239	2020/09	2022/09
Attenuator 3dB	MINI CIRCUITS	BW-S3W2+	A7122240	2020/09	2022/09
Attenuator 3dB	MINI CIRCUITS	BW-S3W2+	A7122241	2020/09	2022/09
Attenuator 3dB	MINI CIRCUITS	BW-S3W2+	A7122242	2020/09	2022/09
Attenuator 3dB	MINI CIRCUITS	BW-S3W2+	A7122243	2020/09	2022/09
Power splitter	Mini-Circuits	ZN6PD-63W-S+	A7132040	2020/09	2022/09
Power splitter	Mini-Circuits	ZN6PD-63W-S+	A7132041	2020/09	2022/09
Load 50 ohms	Fairview Microwave	ST0635F	A7152075	2020/09	2022/09
Load 50 ohms	Fairview Microwave	ST0635F	A7152076	2020/09	2022/09
Load 50 ohms	Fairview Microwave	ST0635F	A7152077	2020/09	2022/09
Load 50 ohms	Fairview Microwave	ST0635F	A7152078	2020/09	2022/09

Note: In our quality system, the test equipment calibration due is more & less 2 months

4.5. DIVERGENCE, ADDITION OR SUPPRESSION ON THE TEST SPECIFICATION

☑ None ☐ Divergence:

4.6. RESULTS

Channel Closing Transmission Time & Channel Move Time	
802.11ac VHT80	
C25	

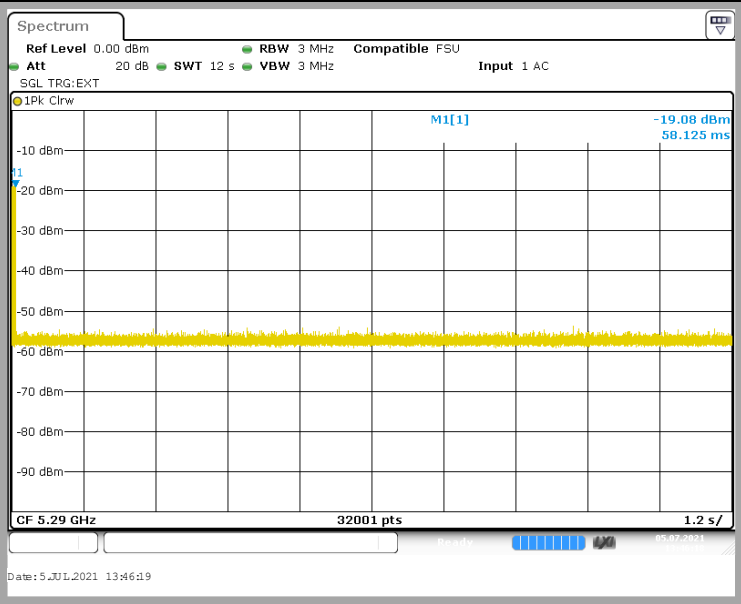

Channel Closing Transmission Time (s)	0,2
Channel Move Time (s)	0,06

4.7. CONCLUSION

Channel Closing Transmission Time & Channel Move Time measurement performed on the sample of the product **COGECO DIW3930 COGECO**, SN: **6211130035003**, in configuration and description presented in this test report, show levels **compliant** to the 47 CFR PART 15.407 & RSS 247 ISSUE 1 limits.

5. DYNAMIC FREQUENCY SELECTION (DFS): NON-OCCUPANCY PERIOD

5.1. TEST CONDITIONS

Test performed by	: Armand MAHOUNGOU
Date of test	: September 28, 2021
Ambient temperature	: 18 °C
Relative humidity	: 46 %

5.2. TEST SETUP

- The Equipment Under Test is:
☑ On a table
☐ In an anechoic chamber

- Measurement is performed with a spectrum analyzer:
☑ On the EUT conducted access
☐ On the EUT with a test fixture

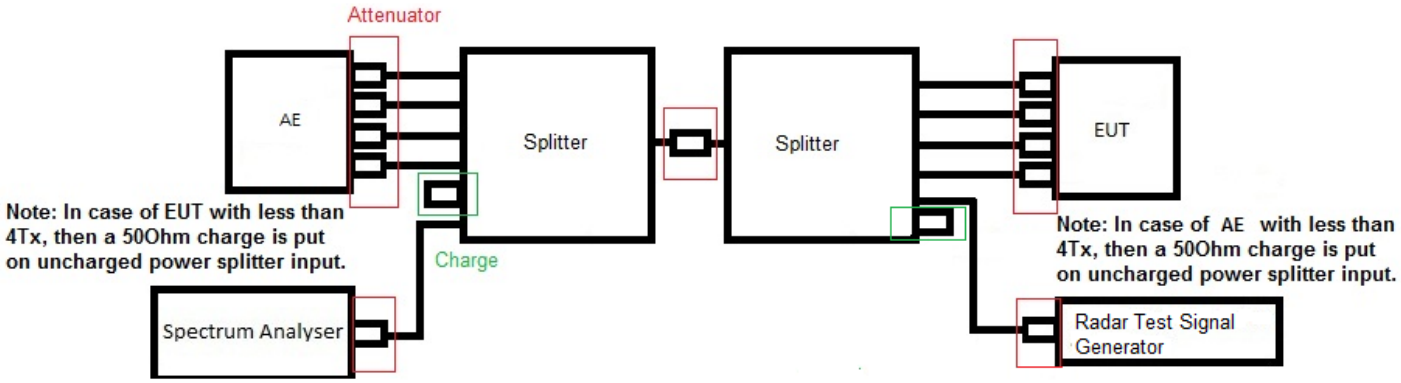

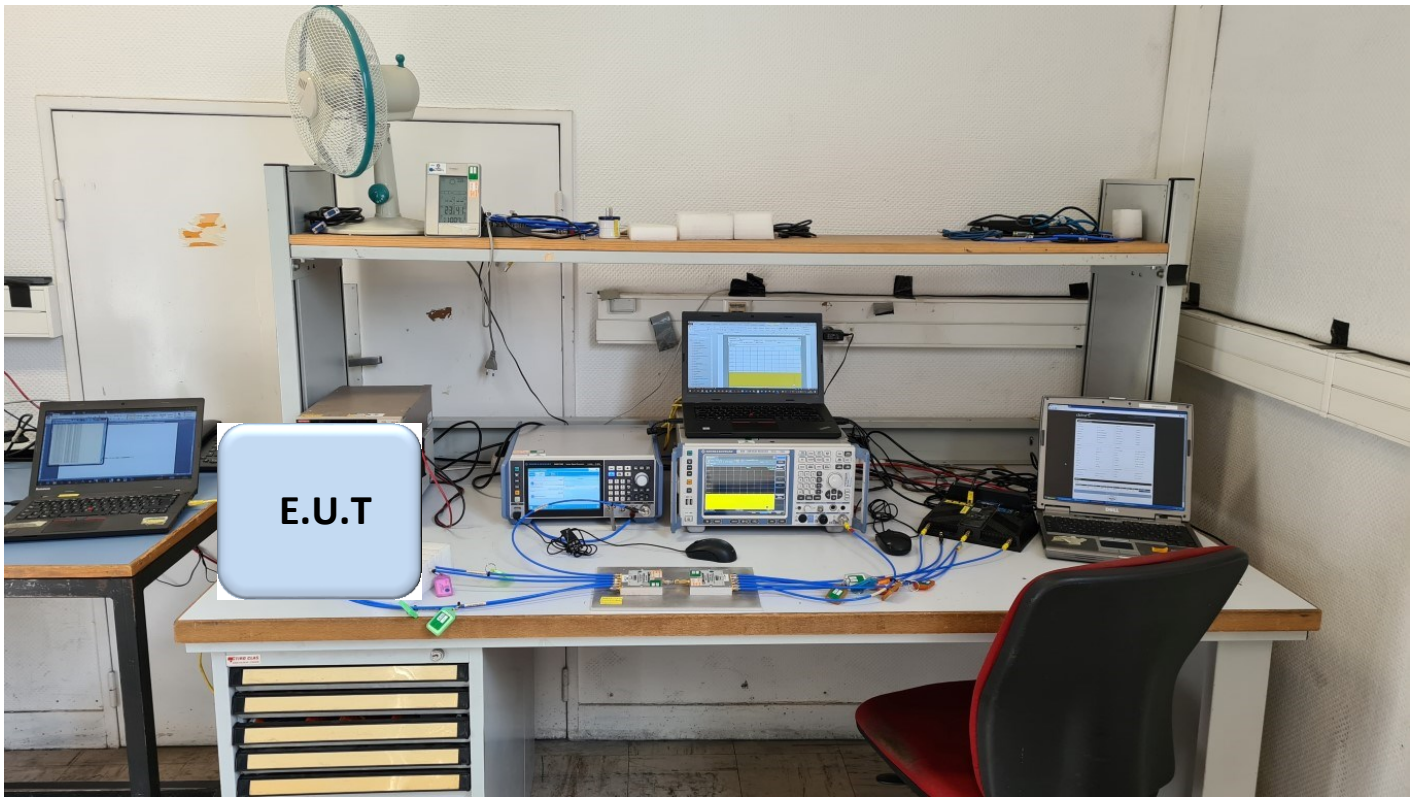

Photograph for DFS Non-Occupancy Period

5.3. LIMIT

Non-Occupancy Period shall exceed 1800 seconds

5.4. TEST EQUIPMENT LIST

DESCRIPTION	MANUFACTURER	MODEL	N° LCIE	Cal_Date	Cal_Due
R&S Commander Software	ROHDE & SCHWARZ	Version 1.6.4	-	-	-
DFS Analysis Tool	ROHDE & SCHWARZ	Version 11.2006 – 1EF59_1E	-	-	-
Power supply	KIKUSUI	PCR500M	A7040079	Calibrate with multimeter	Calibrate with multimeter
Multimeter	KEITHLEY	2000	A1242084	2021/05	2023/05
EMI receiver	ROHDE & SCHWARZ	ESR 7	A2642026	2021/09	2023/09
Signal generator	ROHDE & SCHWARZ	SMV100B	A5442061	2021/09	2023/09
RF cable	Télédyne	920-0202-024	A5329663	2020/09	2022/09
RF cable	Télédyne	920-0202-024	A5329664	2020/09	2022/09
RF cable	Télédyne	920-0202-024	A5329665	2020/09	2022/09
RF cable	Télédyne	920-0202-024	A5329668	2020/09	2022/09
RF cable	Télédyne	920-0202-024	A5329669	2020/09	2022/09
RF cable	Télédyne	920-0202-024	A5329670	2020/09	2022/09
RF cable	Télédyne	920-0202-024	A5329672	2020/09	2022/09
RF cable	Télédyne	920-0202-024	A5329673	2020/09	2022/09
Attenuator 10dB	MINI CIRCUITS	BW-S10W2+	A7122229	2020/09	2022/09
Attenuator 10dB	MINI CIRCUITS	BW-S10W2+	A7122230	2020/09	2022/09
Attenuator 3dB	MINI CIRCUITS	BW-S3W2+	A7122238	2020/09	2022/09
Attenuator 3dB	MINI CIRCUITS	BW-S3W2+	A7122239	2020/09	2022/09
Attenuator 3dB	MINI CIRCUITS	BW-S3W2+	A7122240	2020/09	2022/09
Attenuator 3dB	MINI CIRCUITS	BW-S3W2+	A7122241	2020/09	2022/09
Attenuator 3dB	MINI CIRCUITS	BW-S3W2+	A7122242	2020/09	2022/09
Attenuator 3dB	MINI CIRCUITS	BW-S3W2+	A7122243	2020/09	2022/09
Power splitter	Mini-Circuits	ZN6PD-63W-S+	A7132040	2020/09	2022/09
Power splitter	Mini-Circuits	ZN6PD-63W-S+	A7132041	2020/09	2022/09
Load 50 ohms	Fairview Microwave	ST0635F	A7152075	2020/09	2022/09
Load 50 ohms	Fairview Microwave	ST0635F	A7152076	2020/09	2022/09
Load 50 ohms	Fairview Microwave	ST0635F	A7152077	2020/09	2022/09
Load 50 ohms	Fairview Microwave	ST0635F	A7152078	2020/09	2022/09

Note: In our quality system, the test equipment calibration due is more & less 2 months

5.5. DIVERGENCE, ADDITION OR SUPPRESSION ON THE TEST SPECIFICATION

☑ None ☐ Divergence:

5.6. RESULTS

Non Occupancy Period	
802.11ac VHT80	
C25	

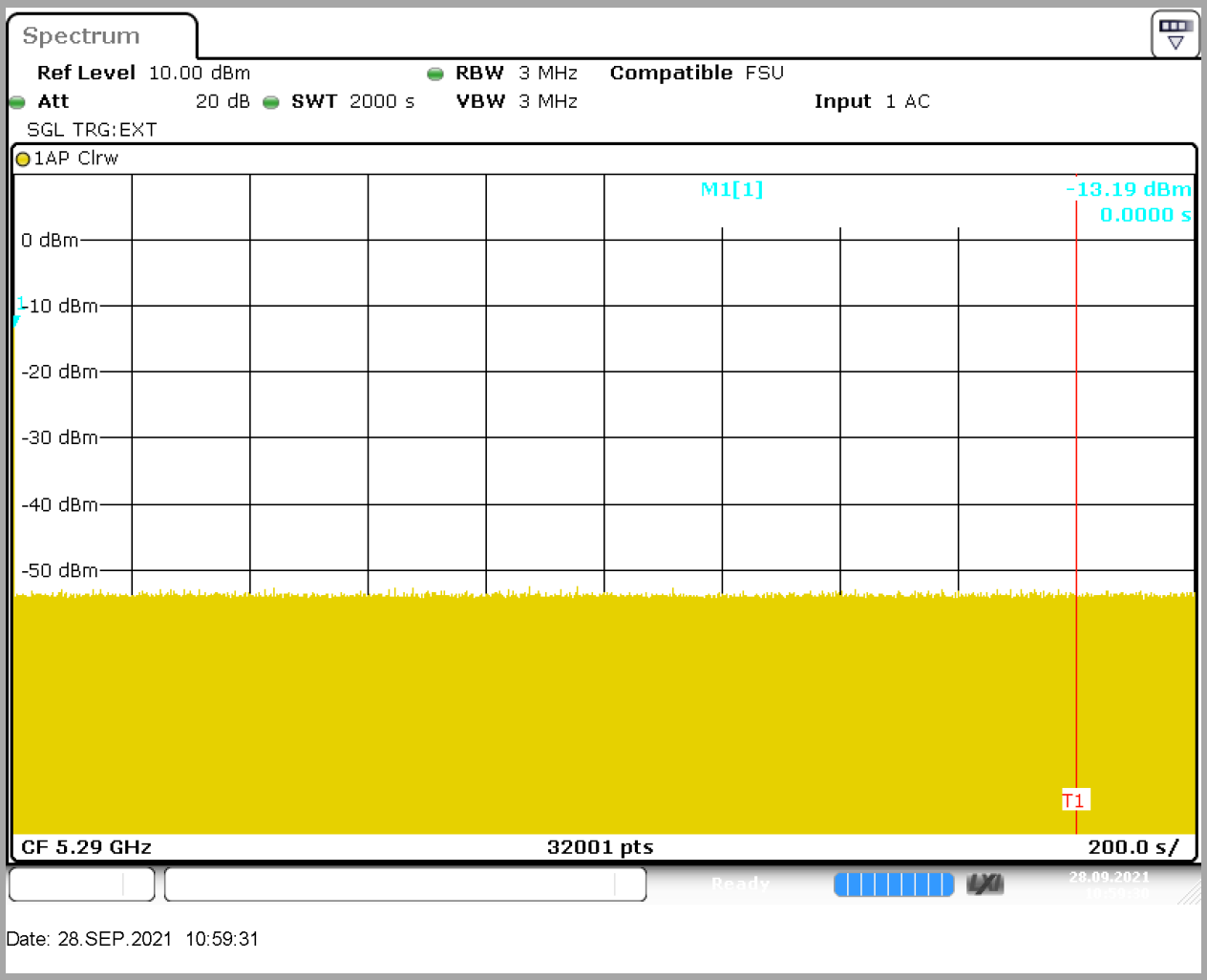

Non occupancy period (s)	>1800

5.7. CONCLUSION

Non-Occupancy period measurement performed on the sample of the product **COGECO DIW3930 COGECO**, SN: **6211130035003**, in configuration and description presented in this test report, show levels **compliant** to the 47 CFR PART 15.407 & RSS 247 ISSUE 1 limits.

6. ANNEX : RADAR TEST SIGNAL T0

TYPE 0		
Pulses per Burst	**Pulse Width (µsec)**	**PRI (µs)**
18	1	1428

7. UNCERTAINTIES CHART

47 CFR Part 15.209 & 15.207 Kind of test	Wide uncertainty laboratory (k=2) ±x(dB) / (Hz)/ ms	Uncertainty limit
Measurement of conducted disturbances in voltage on the AC power port (9 kHz – 150 kHz)	2,67	3.8
Measurement of conducted disturbances in voltage on the AC power port (150 kHz – 30 MHz)	2,67	3.4
Measurement of conducted disturbances in voltage on the telecommunication port. (AAN)	3,67	5.0
Measurement of conducted disturbances in current (current clamp)	2,73	2.9
Measurement of disturbance power	2,67	4.5
Measurement of radiated magnetic field from 10kHz to 30MHz in SAC V01	4,48	/
Measurement of radiated magnetic field from 10kHz to 30MHz in SAC C01	4,48	/
Measurement of radiated electric field from 30 to 1000MHz in horizontal position on the OATS (Ecuelles)	4,88	6.3
Measurement of radiated electric field from 1 to 18GHz on the Ecuelles site	5.16	/
Measurement of radiated electric field from 30 to 1000MHz in vertical position on the OATS (Ecuelles)	4,99	6.3
Measurement of radiated electric field from 30 to 1000MHz in horizontal position in SAC C01	5,08	6.3
Measurement of radiated electric field from 30 to 1000MHz in vertical position in SAC C01	5,16	6.3
Measurement of radiated electric field from 30 to 1000MHz in horizontal position in SAC V01	5,08	6.3
Measurement of radiated electric field from 30 to 1000MHz in vertical position in SAC V01	5,15	6.3
Measurement of radiated electric field from 1 to 6 GHz C01	5,1	5.2
Measurement of radiated electric field from 1 to 6 GHz V01	4,85	5.2
Measurement of radiated magnetic field from 10kHz to 30MHz on the OATS (Ecuelles)	4,48	/

The uncertainty values calculated by the laboratory are lower than limit uncertainty values defined by the CISPR. The conformity of the sample is directly established by the applicable limits values. This table includes all uncertainties maximum feasible for testing in the laboratory, whether or not made in this report