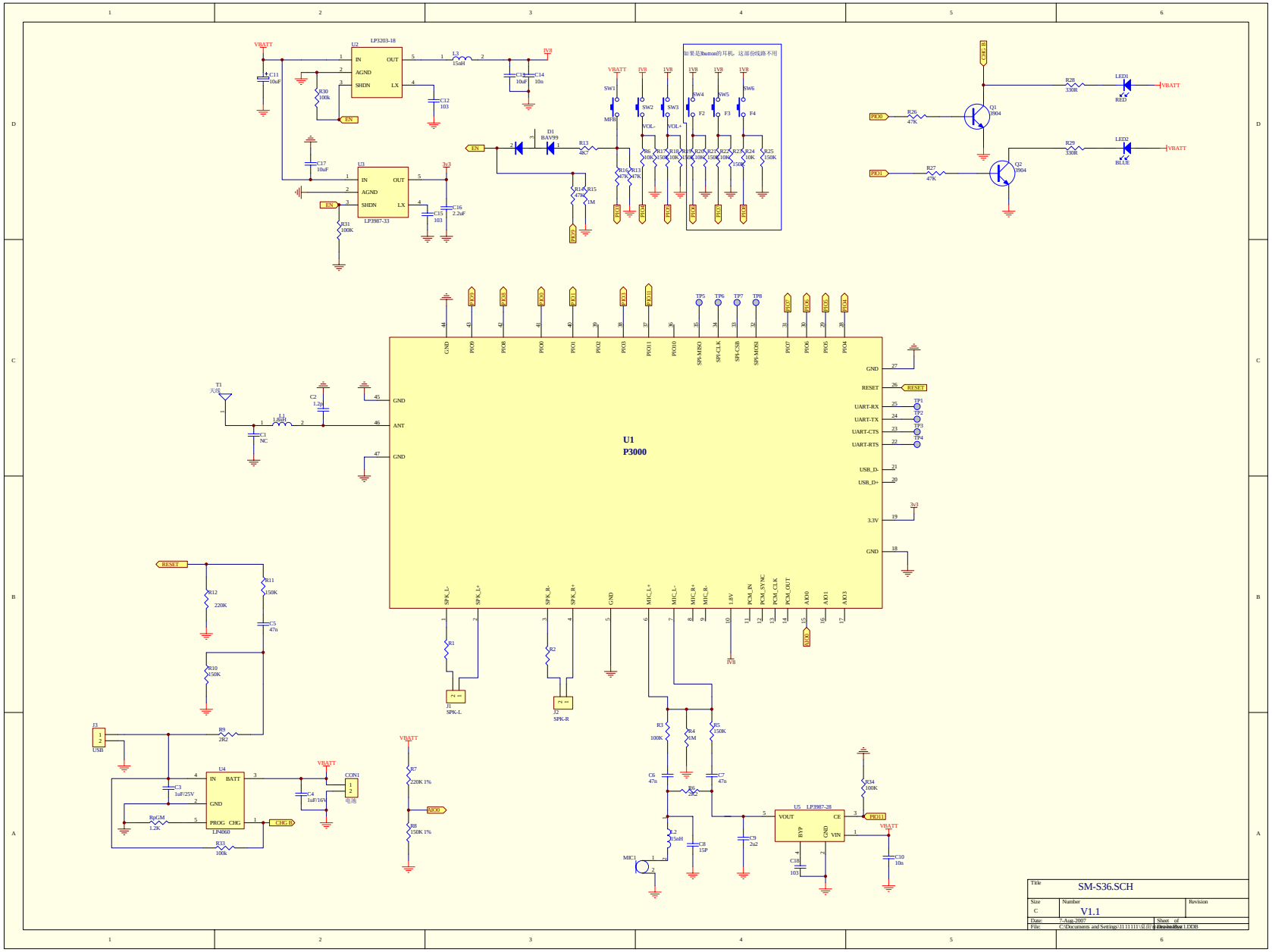
U1
P3000
LP3203-18
LP3987-33
LP4060
U5 LP3987-28
如果是Button的耳机，这部份线路不用
Title
SM-S36.SCH
Size
C
Number
V1.1
Revision
Date: 7-Aug-2007
Sheet of
File: C:\Documents and Settings\11 11 111\桌面\SM-S36.DDB
Drawn By:

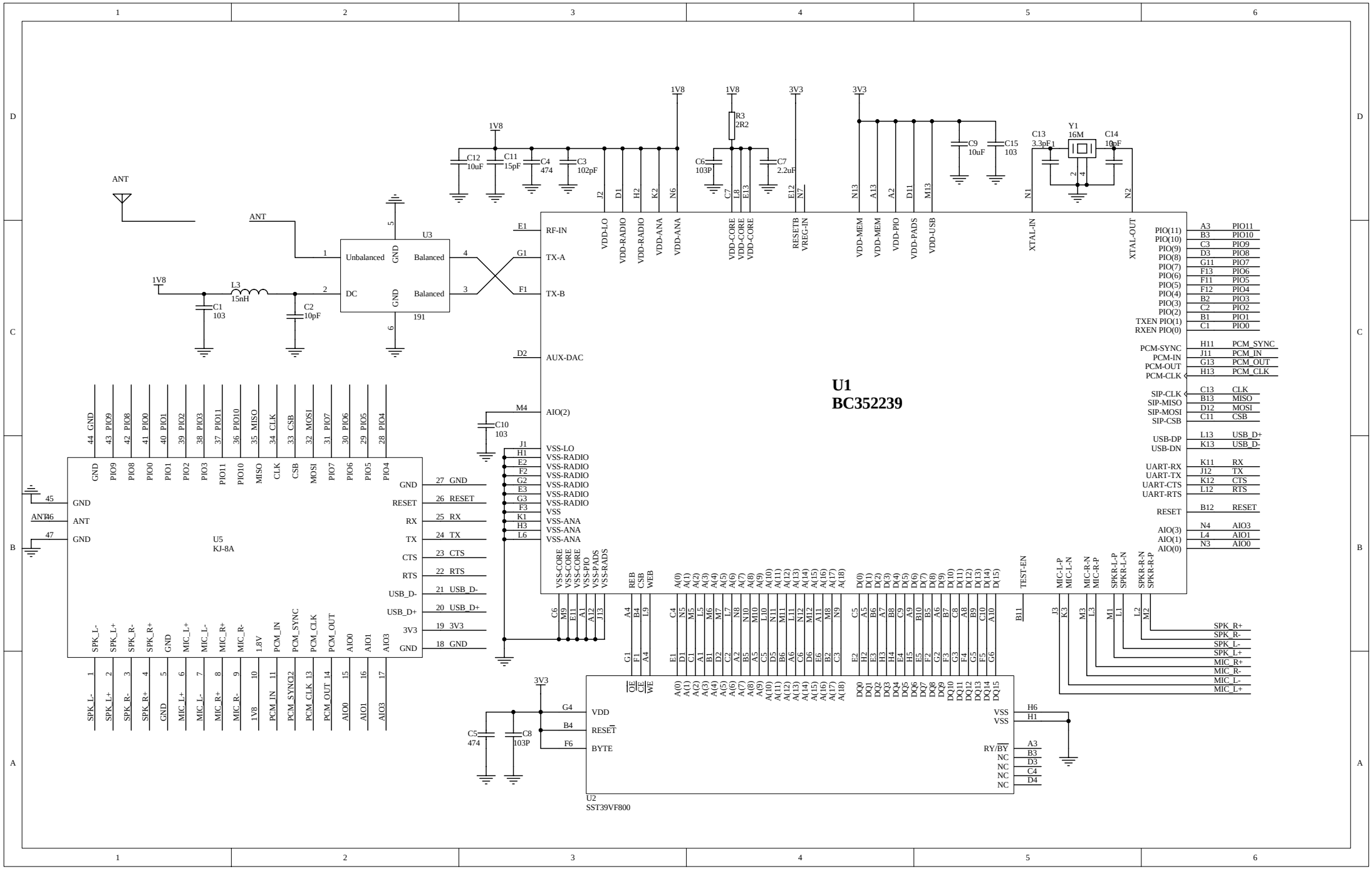
U1
BC352239
U2
SST39VF800
U3
U5
KJ-8A
ANT
Unbalanced
Balanced
Balanced
DC
GND
1V8
3V3
R3
2R2
C1
103
C2
10pF
L3
15nH
C3
102pF
C4
474
C5
474
C6
103P
C7
2.2uF
C8
103P
C9
10uF
C10
103
C11
15pF
C12
10uF
C13
3.3pF
C14
10pF
C15
103
Y1
16M
RF-IN
TX-A
TX-B
AUX-DAC
AIO(2)
VDD-LO
VDD-RADIO
VDD-ANA
VDD-CORE
RESETB
VREG-IN
VDD-MEM
VDD-PIO
VDD-PADS
VDD-USB
XTAL-IN
XTAL-OUT
VSS-LO
VSS-RADIO
VSS-ANA
VSS-CORE
VSS-PIO
VSS-PADS
VSS
PIO(11)
PIO(10)
PIO(9)
PIO(8)
PIO(7)
PIO(6)
PIO(5)
PIO(4)
PIO(3)
PIO(2)
TXEN PIO(1)
RXEN PIO(0)
PCM-SYNC
PCM-IN
PCM-OUT
PCM-CLK
SIP-CLK
SIP-MISO
SIP-MOSI
SIP-CSB
USB-DP
USB-DN
UART-RX
UART-TX
UART-CTS
UART-RTS
RESET
AIO(3)
AIO(1)
AIO(0)
REB
CSB
WEB
TEST-EN
MIC-L-P
MIC-L-N
MIC-R-N
MIC-R-P
SPKR-L-P
SPKR-L-N
SPKR-R-N
SPKR-R-P
SPK_R+
SPK_R-
SPK_L-
SPK_L+
MIC_R+
MIC_R-
MIC_L-
MIC_L+
OE
CE
WE
VDD
RESET
BYTE
VSS
RY/BY
NC
GND
RESET
RX
TX
CTS
RTS
USB_D-
USB_D+
3V3
ANT
PCM_IN
PCM_SYNC
PCM_CLK
PCM_OUT
AIO0
AIO1
AIO3
1.8V