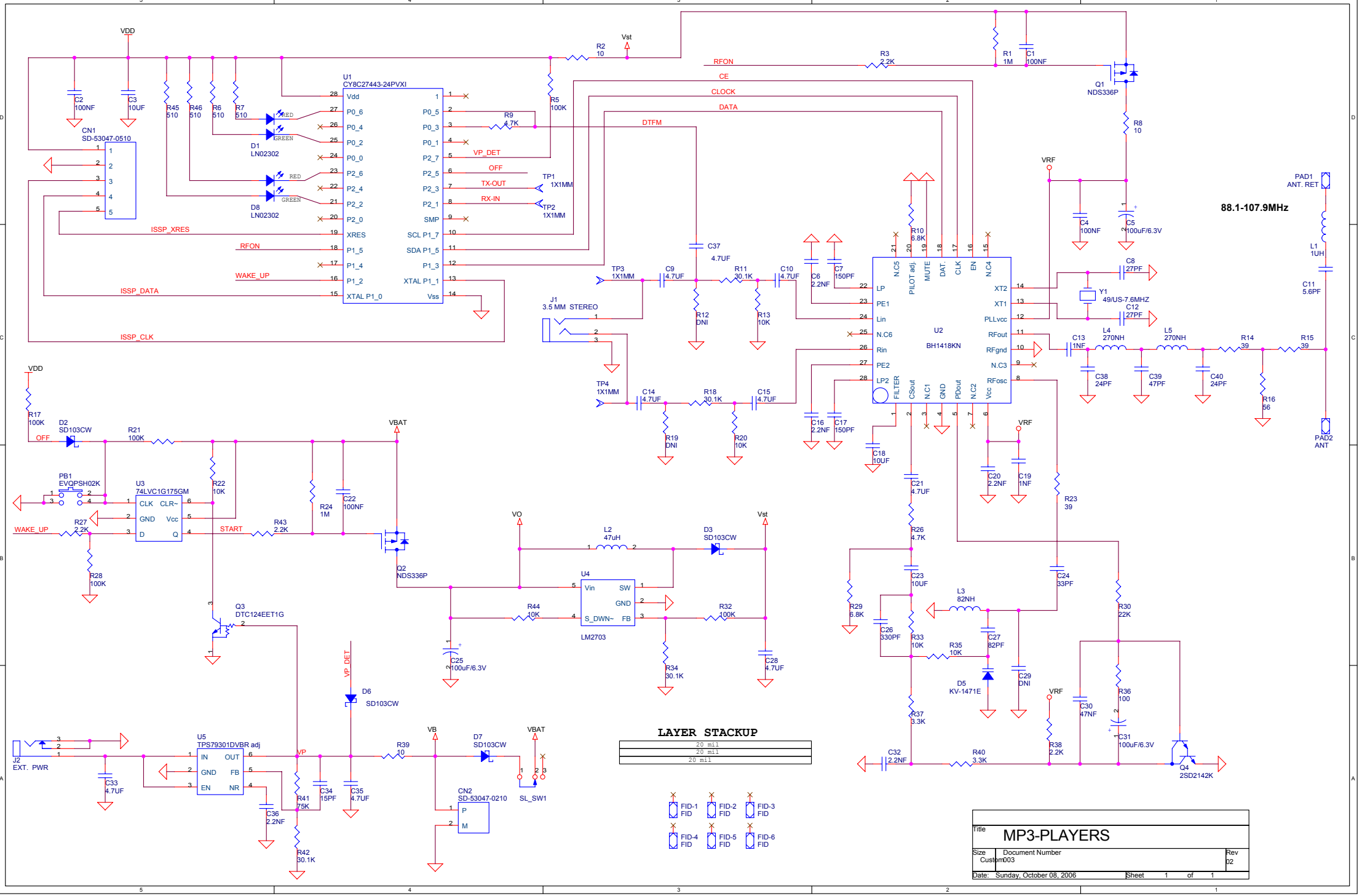

APPLICANT: FMP-3 COMPANY CO., LTD.

FCC ID: UZY489702116