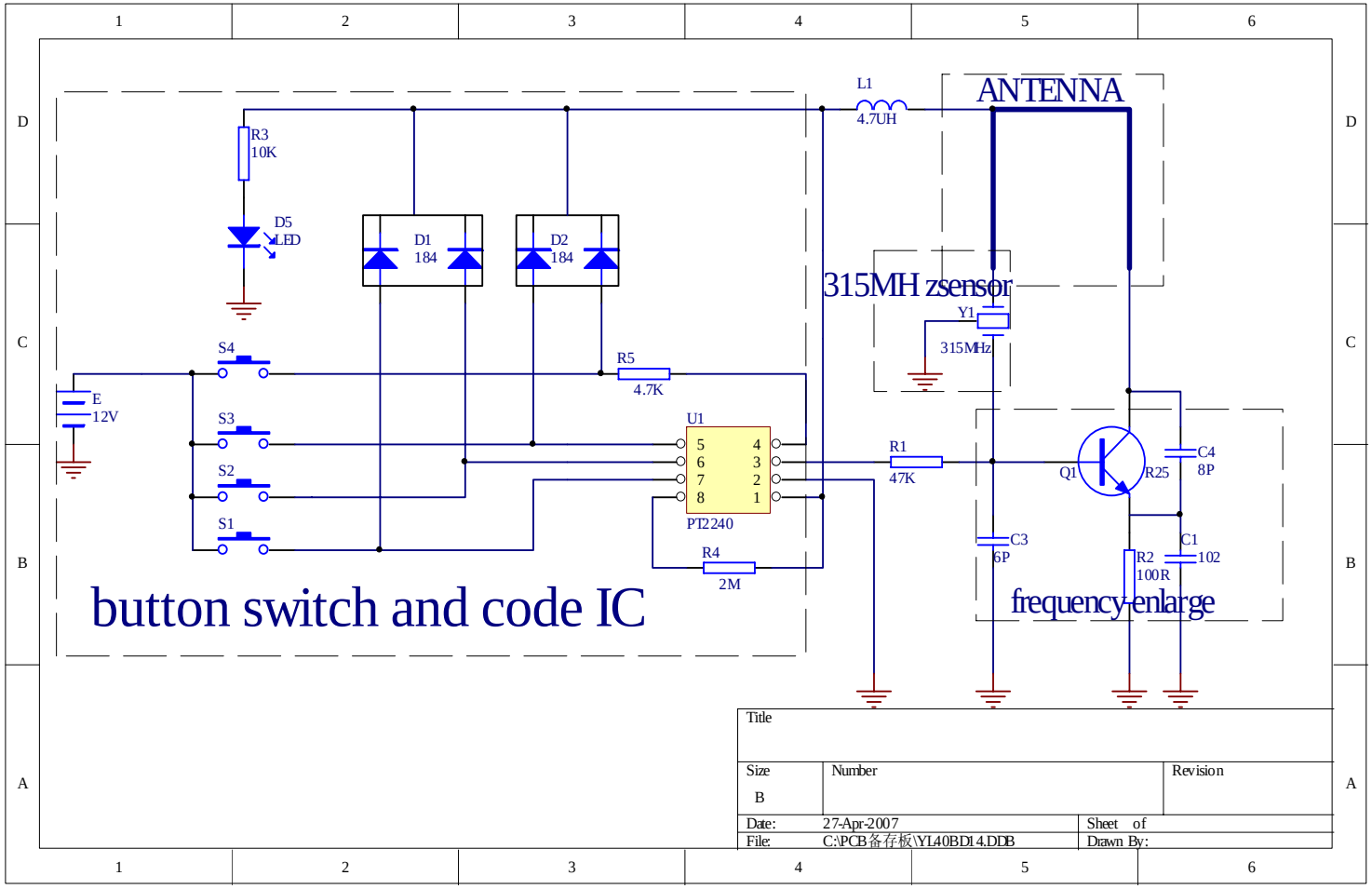

Title		
Size B	Number	Revision
Date: 27-Apr-2007	Sheet of	
File: C:\PCB备存板\YL40BD14.DDB	Drawn By:	