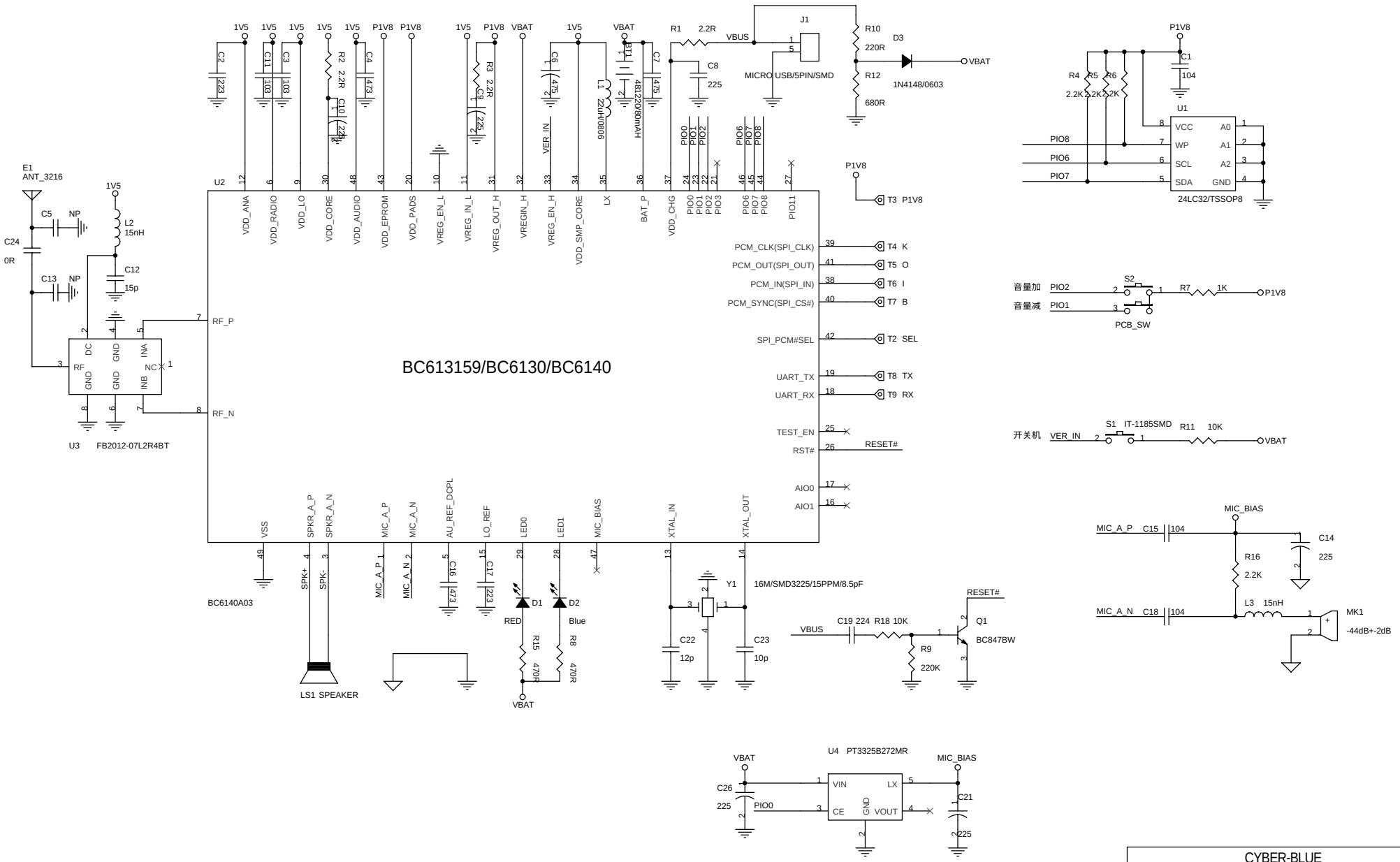

CYBER-BLUE

Title	KT4700_C6R_V3
Size A3	Document Number KT4700_C6R_V3_SCH
Rev	V3
Date:	Monday, August 02, 2010
Sheet	1 of 1