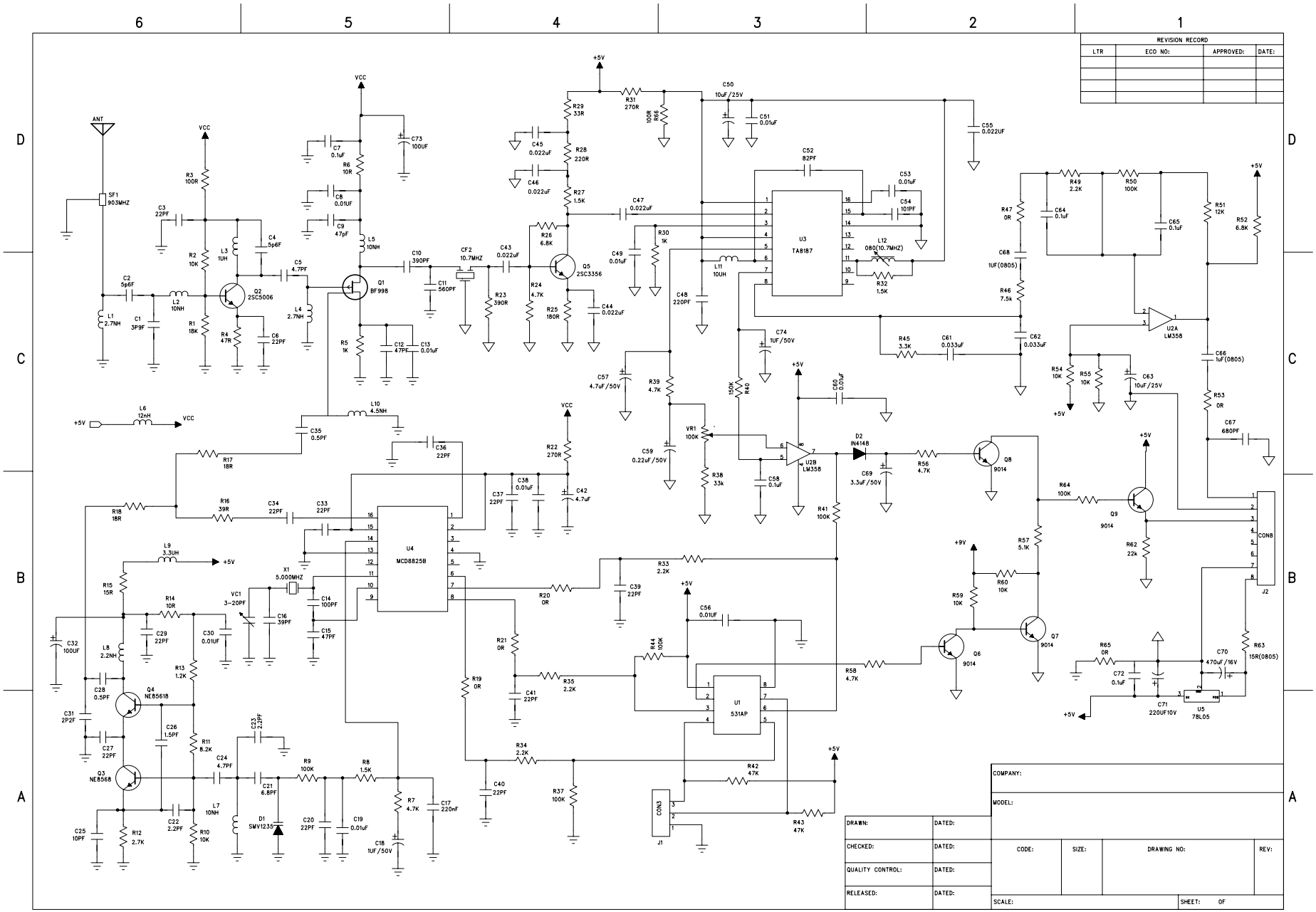

FCC ID: U7J-BKWMSIPOD-RX

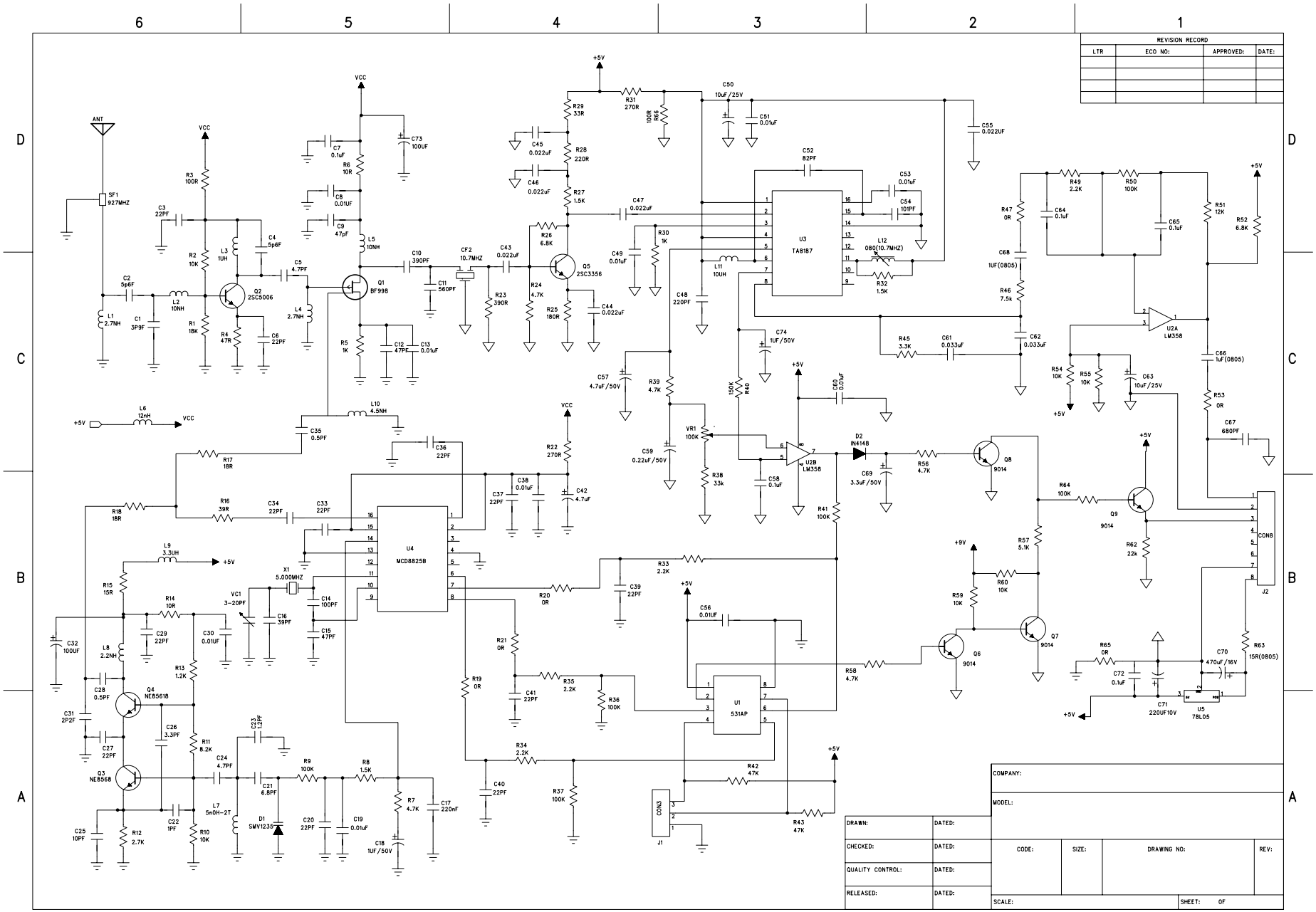

FCC ID: U7J-BKWMSIPOD-RX

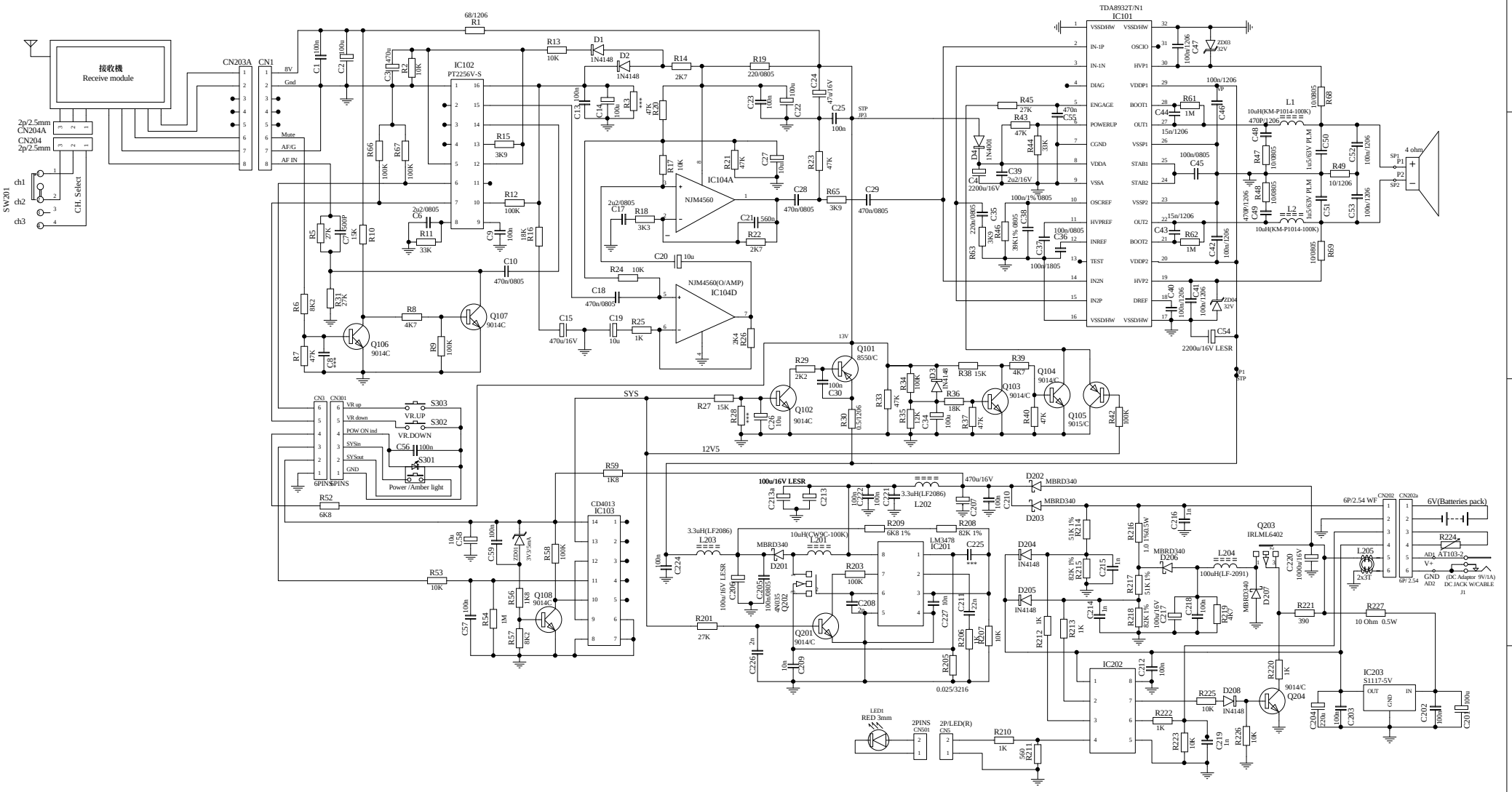

FCC ID: U7J-BKWMSIPOD-RX

Title	BL647 Speaker	
Size C	Number BL647-PODZ-AMP .SCH	Revision
Date: 25-Jun-2007	Sheet of	
File: D:\mk Ngai\Podz iPod dock BL647.DDB	Drawn By:	