标记	处数	更改文号	签名	日期

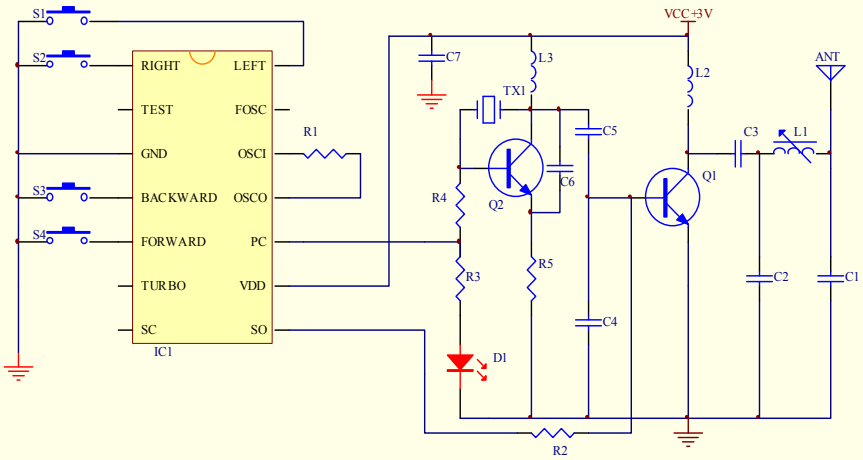

TX1	C6	C5	C4	C3	C2	C1	R5	R2	L3	L2	L1	D1
49.860MHZ	18P	33P	47P	33P	33P	6P	100	10K	1UH	1UH	49T	RED 5mm

AULDEY	COMPANY: AULDEY TOY INDUSTRY LTD.		
	MODEL NO: YW281010/020		
	MODEL NAME: 281遥控器		
DEZIGN:	TITLE: 281发射器电原理图		
CHECKED:	DRAWING NO:		REV: 00
APPROVED:	CODE:	SIZE:	SHEET: