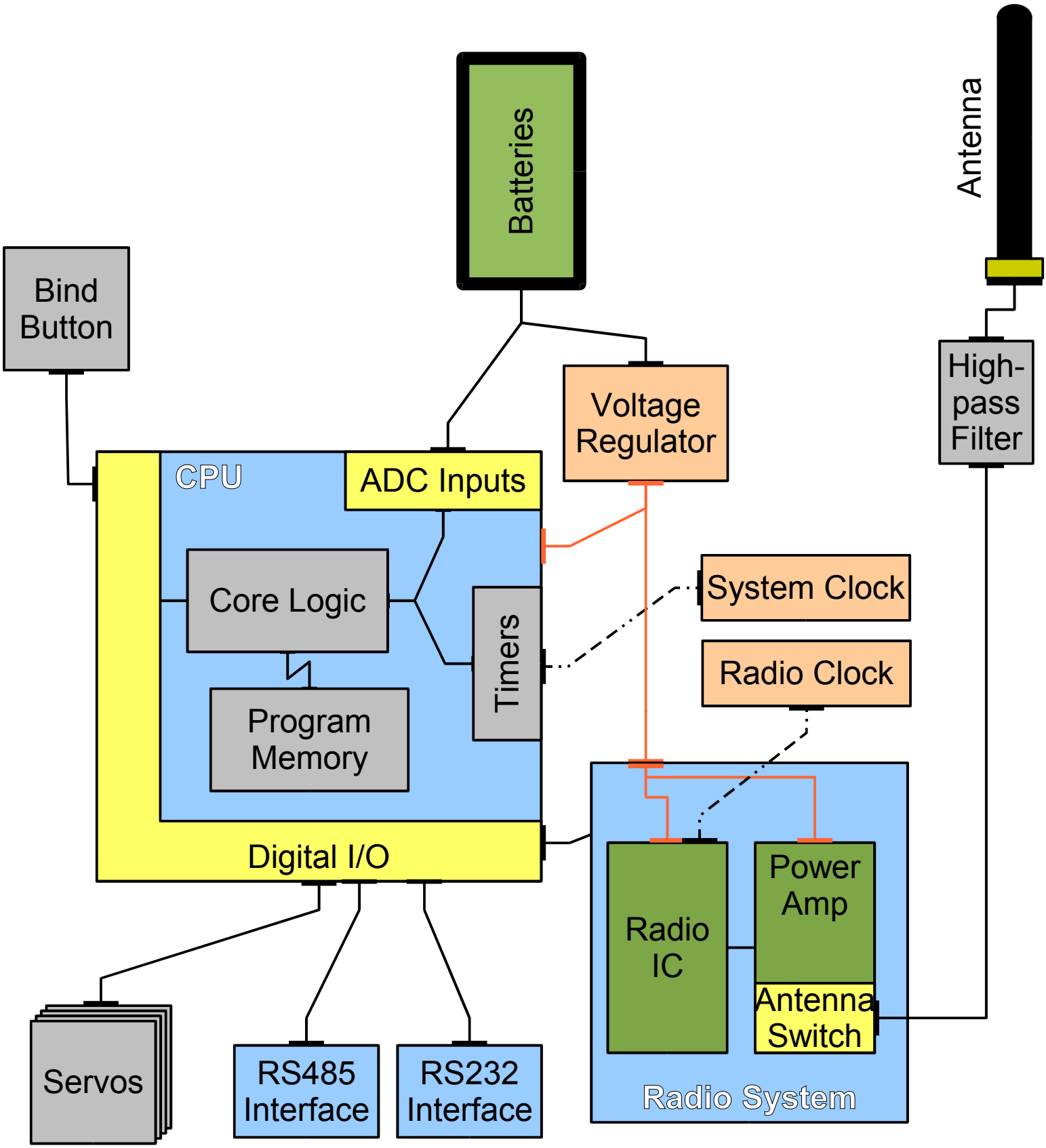Nomadio RCU / Copyright 2004, 2005 / Company Confidential