SAMPLE LABEL & LOCATION

LABELLING REQUIREMENTS

The Label shown shall be permanently affixed at a conspicuous location on the device and be readily visible to the user at the time of purchase

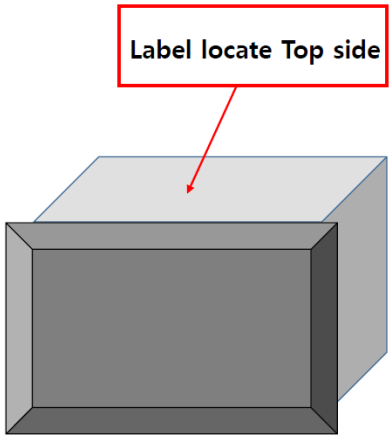

HYUNDAI MOBIS MODEL: **ACB40G5AN** 14.4 V | 4 Ω | 5 A AM 530 ~ 1710 kHz FM 87.5 ~ 107.9 MHz FCC ID: TQ8-ACB40G5AN MADE IN KOREA THIS RECEIVER COMPLIES WITH SUBPART C., PART 15 OF FCC RULES. UNDER LICENSE OF STAAR S.A., BRUXELLS BELGIUM: DOLBY NOISE REDUCTION MANUFACTURED UNDER LICENSE FROM DOLBY LABORATORIES LICENSING CORPORATION. "DOLBY" AND THE DOUBLE-D SYMBOL ARE TRADEMARKS OF DOLBY LABORATORIES LICENSING CORPORATION. MANUFACTURED : HYUNDAI MOBIS CO., LTD.	**This device complies with Part 15 of the FCC Rules.** **Operation is subject to the following two conditions:** **1) This device may not cause harmful interference, and** **2) This device must accept any interference received, including interference that may cause undesired operation of the device.**

- The FCC label shown is representative of the label that will appear on the radio when in production. Other information may also be included on this label.

Copyright © 2016, DT&C Co., Ltd.