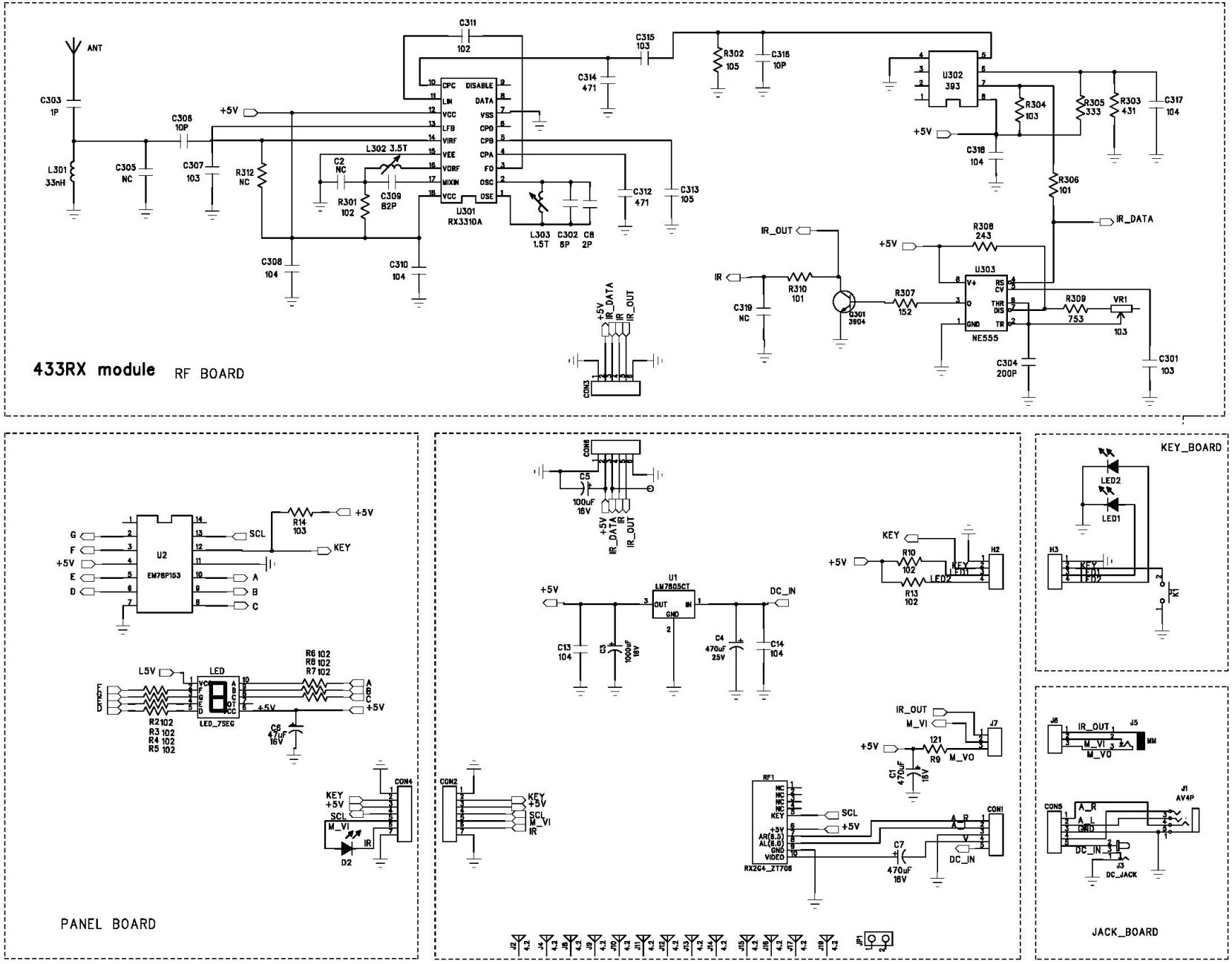

1.0	FIRST RELEASED	2005/06/14
REVISION	UPDATED DESCRIPTION	ISSUE DATE

TITLE	SCHEMATIC DIAGRAM
CAD REF.: V750TX00	DRAWN:
MODEL NO.: ZT-750T	CHKD:
PAGE 1 OF 1	APRD: