REVISIONS						
ECN#	ZONE	REV	DESCRIPTION	REVD. BY	CHKD. BY	DATE

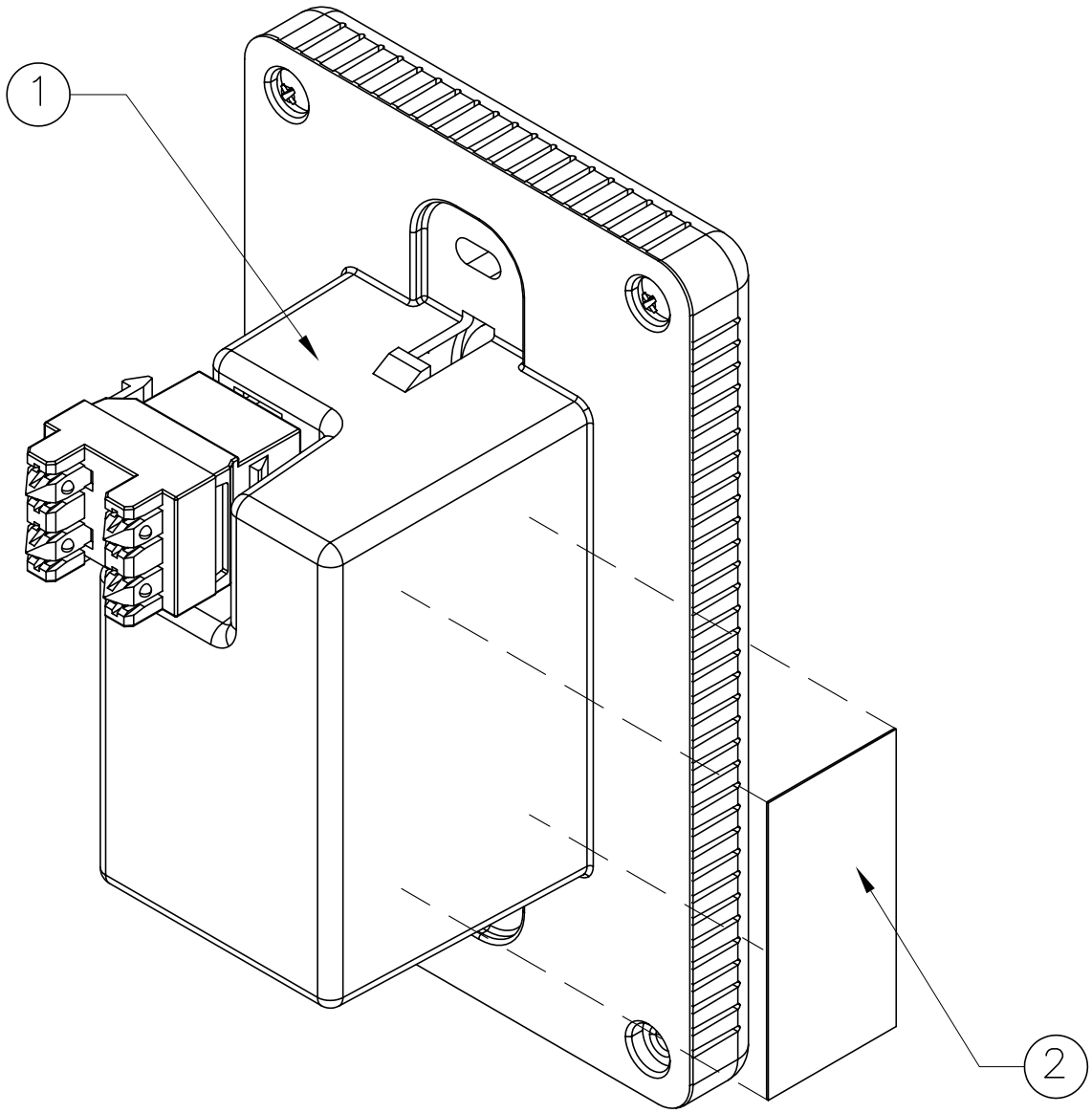

ITEM	QUAN	PART NUMBER	REV	SUPPLIER/VENDOR	DESCRIPTION
2	1	LP05-013-121			LABEL, MINI AP, CERTIFICATION
1	1	LP05-013-110			ASSEMBLY, MINI ACCESS POINT

DIMENSIONS
INCHES (UNLESS OTHERWISE SPECIFIED)

TOLERANCES (UNLESS OTHERWISE SPECIFIED ALL DIMENSIONS AFTER FINISH)
0.1±:
0.01±: .020" HOLES±: .005
0.001±: .010" ANG±: 1°

MATERIAL
SEE INDIVIDUAL COMPONENTS

FINISH
SEE INDIVIDUAL COMPONENTS

*** NOTICE ***
THIS DOCUMENT CONTAINS CONFIDENTIAL AND/OR PROPRIETARY INFORMATION INTENDED FOR USE ONLY BY THE INDIVIDUAL(S) SPECIFIED HEREIN AND ONLY FOR THE PURPOSE(S) PROVIDED. NEITHER THIS DOCUMENT, NOR ANY INFORMATION CONTAINED HEREIN, MAY BE COPIED, DISTRIBUTED, DISCLOSED TO ANY THIRD PARTY OR USED IN ANY MANNER OTHER THAN FOR WHICH IT HAS BEEN PROVIDED, WITHOUT THE PRIOR WRITTEN CONSENT OF ORTRONICS, INC.

DWN.BY: HATHAWAY DATE 04/24/06
CHK.BY:
APP.BY:

ORTRONICS®
125 EUGENE O'NEILL DRIVE
NEW LONDON, CT 06320
TEL: 860-445-3800
FAX: 860-405-2990

TITLE
LABEL POSITION, MINI AP,
CERTIFICATION AND PART NUMBER

SIZE	CAD FILE	PART NUMBER	REV
A	LP050131201	LP05-013-120	

SCALE	REL DATE	SHEET
NONE	04/24/06	1 OF 1