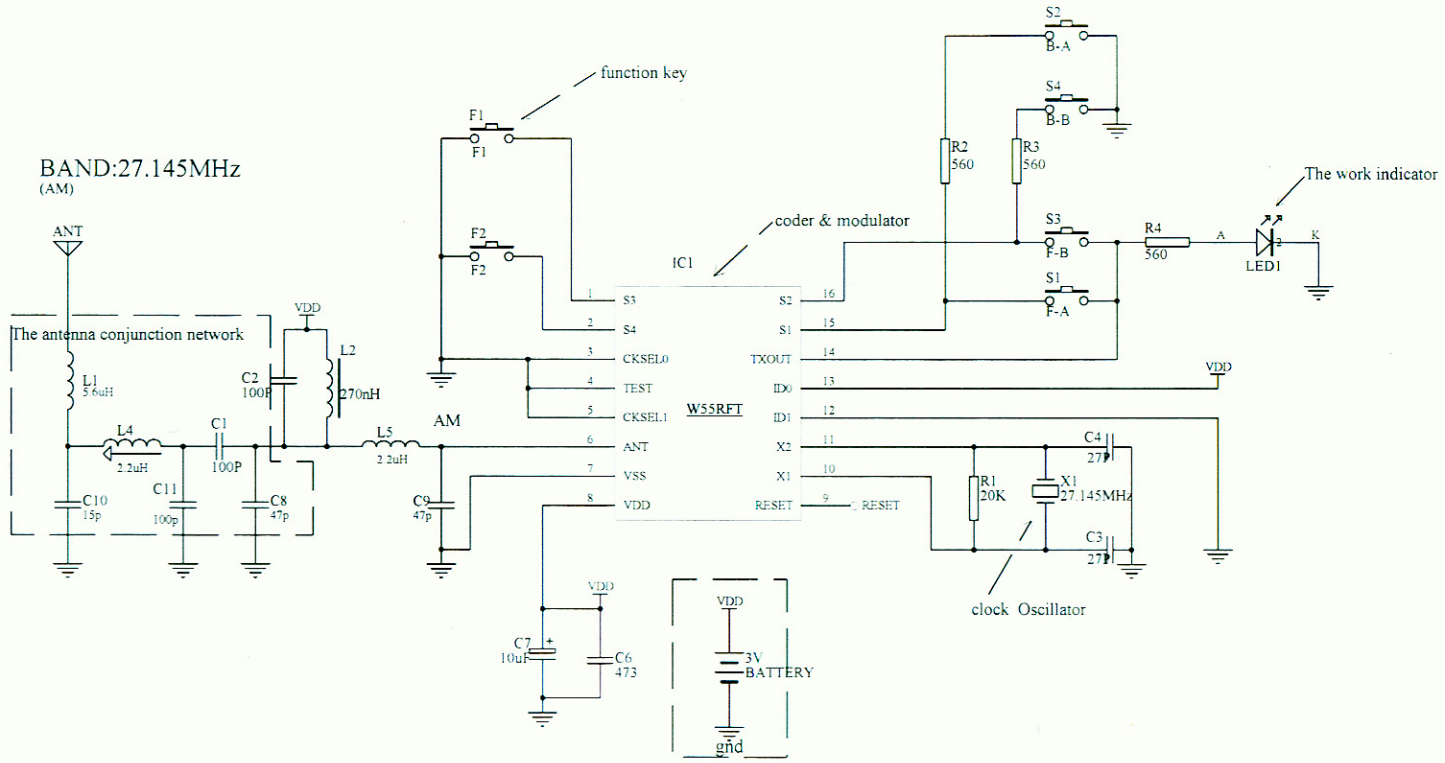

Title	Doggie(PP55TX)	
Size	Number	Revision
B		
Date	20-May-2005	Sheet of
File	E:\huang hua\TEST-PP55TX.DDB	Drawn by