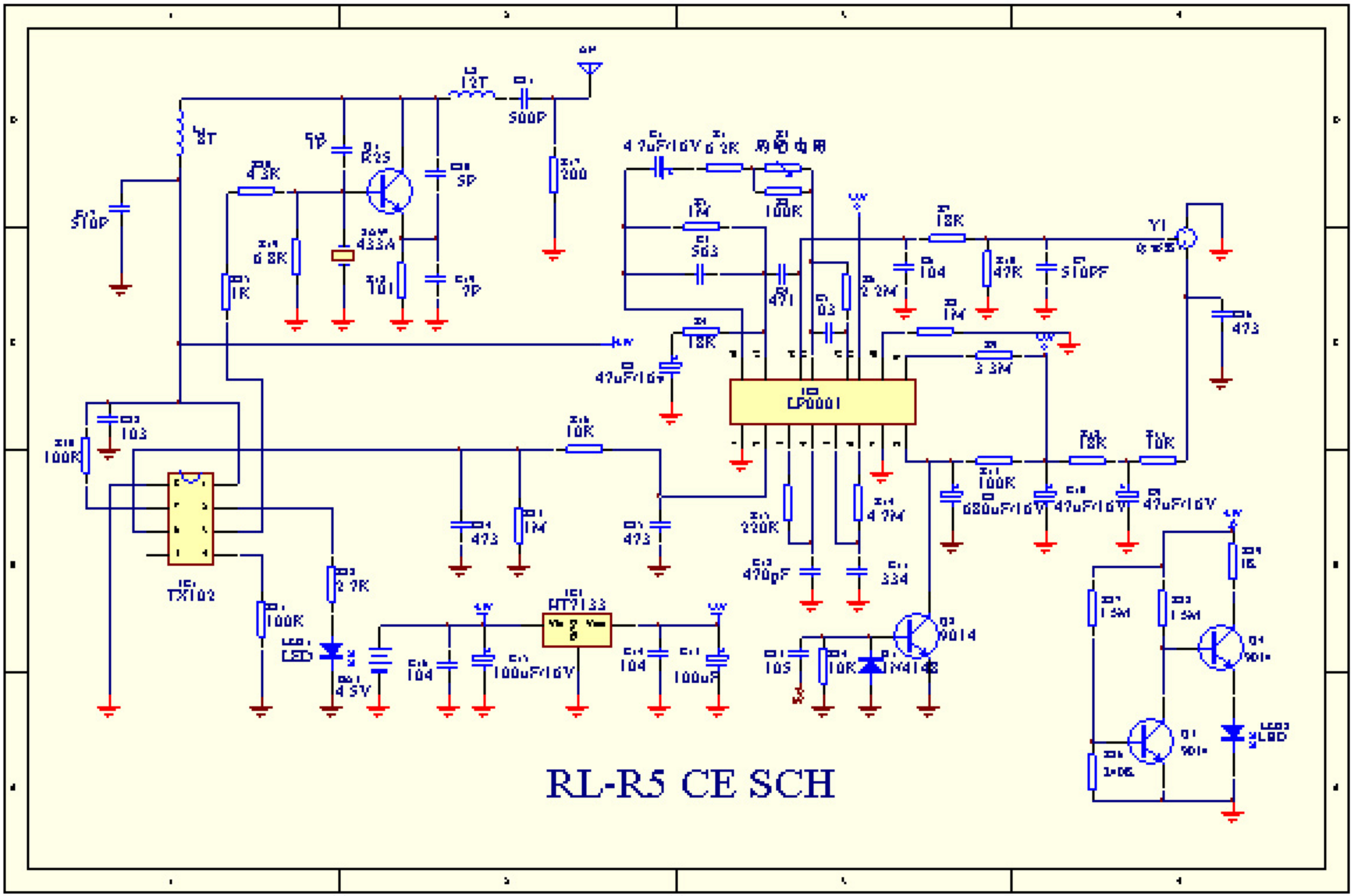
RL-R5 CE SCH
LP0001
HT7133
TX102
Y1
LED
LED3
433A
4.5V
100uF/16V
47uF/16V
680uF/16V
470pF
220K
100K
10K
18K
47K
510PF
500P
200
12T
8T
5P
7P
1K
6.8K
43K
2.2M
3.3M
4.7M
334
473
104
103
105
1N4148
9014
9013