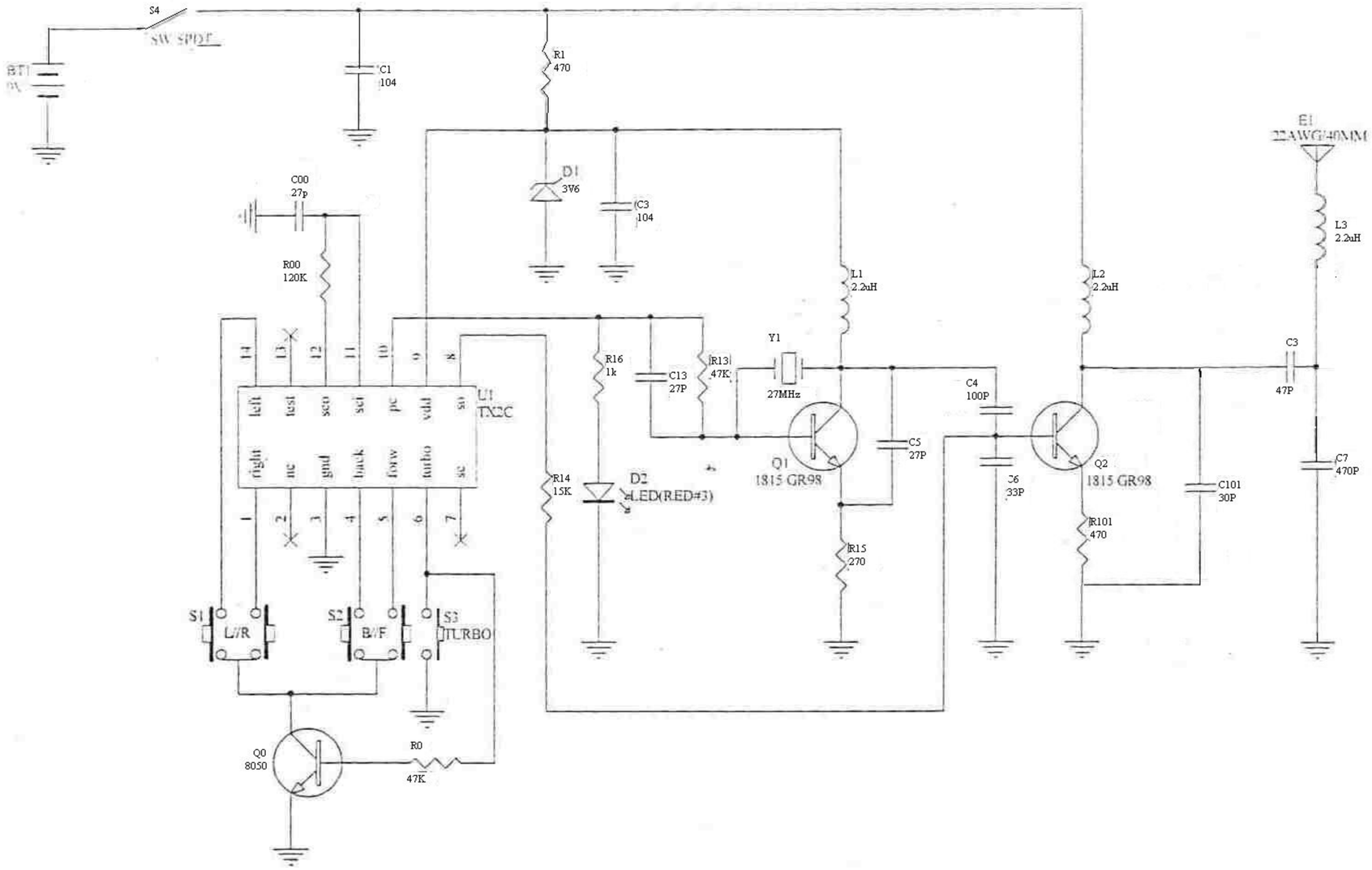

Title	气垫船发射电路图	
Size A4	Number SY-S055-C	Revision V1.0
Date 9-May-2005		Sheet of 1 of 1
File D:\PROTEL\sy-s055.sch		Drawn By