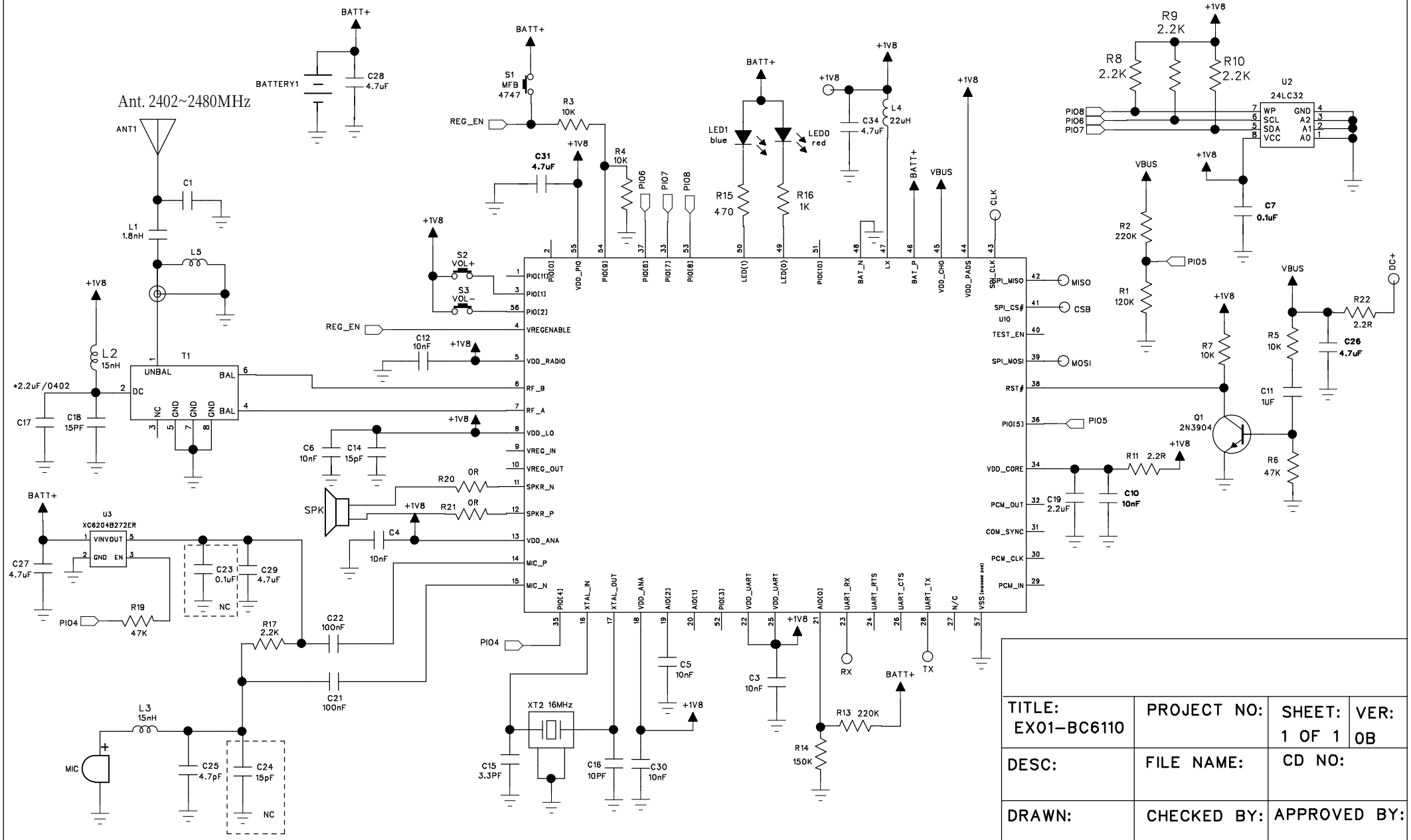

TITLE: EX01-BC6110	PROJECT NO:	SHEET: 1 OF 1	VER: 0B
DESC:	FILE NAME:	CD NO:	
DRAWN:	CHECKED BY:	APPROVED BY:	

PDF 文件使用 "pdfFactory Pro" 试用版本创建 www.fineprint.cn