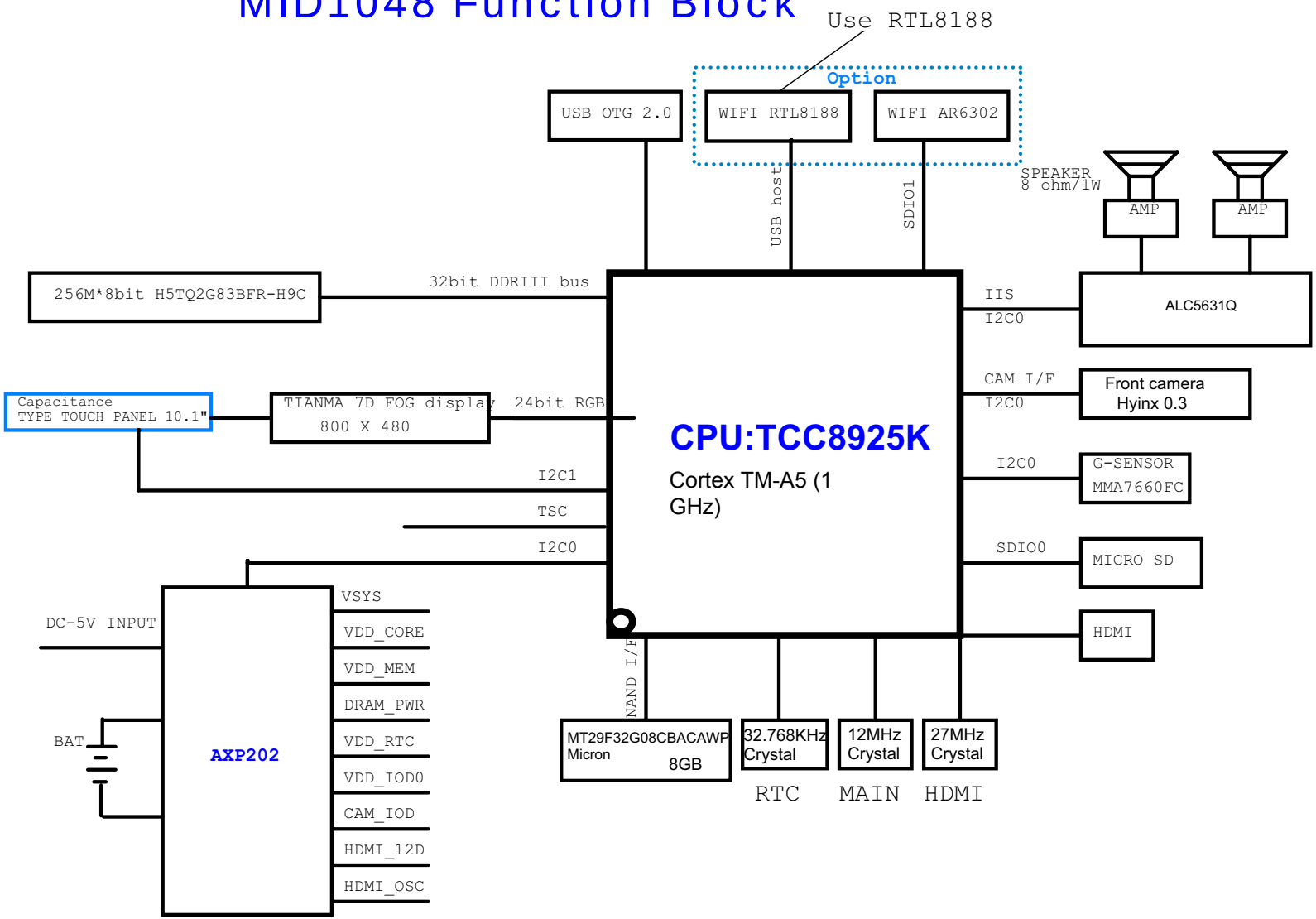MID1048 Function Block