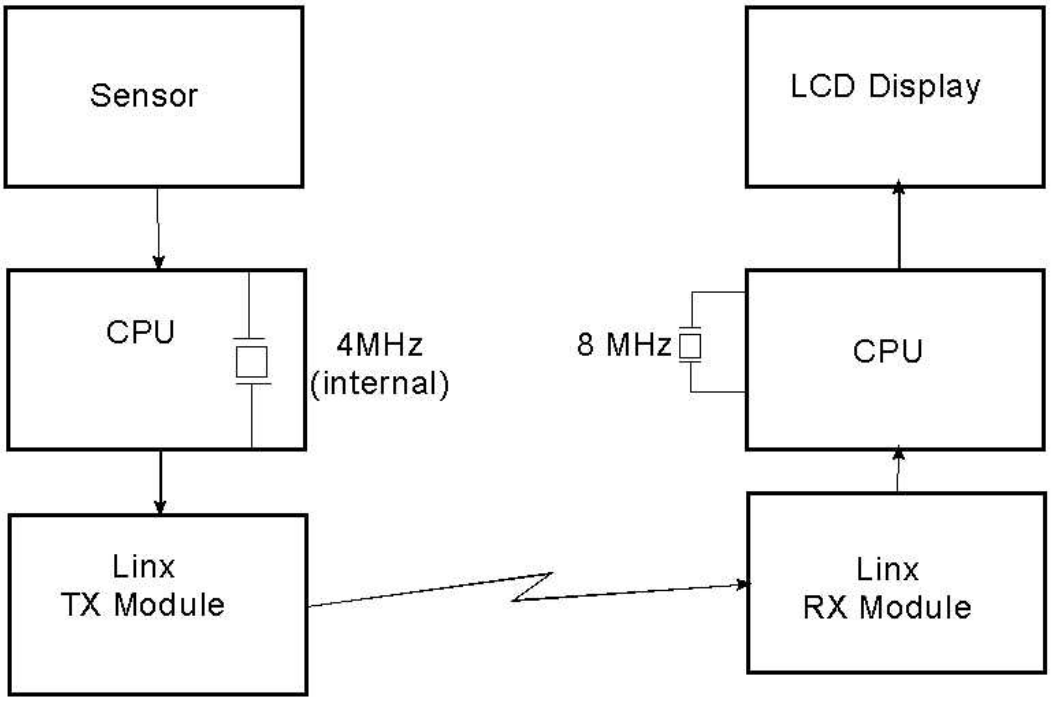

SYSTEM BLOCK DIAGRAM

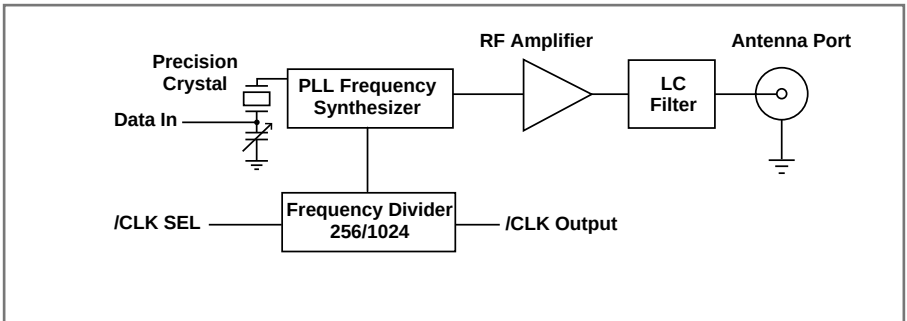
Precision
Crystal
Data In
PLL Frequency
Synthesizer
RF Amplifier
LC
Filter
Antenna Port
/CLK SEL
Frequency Divider
256/1024
/CLK Output