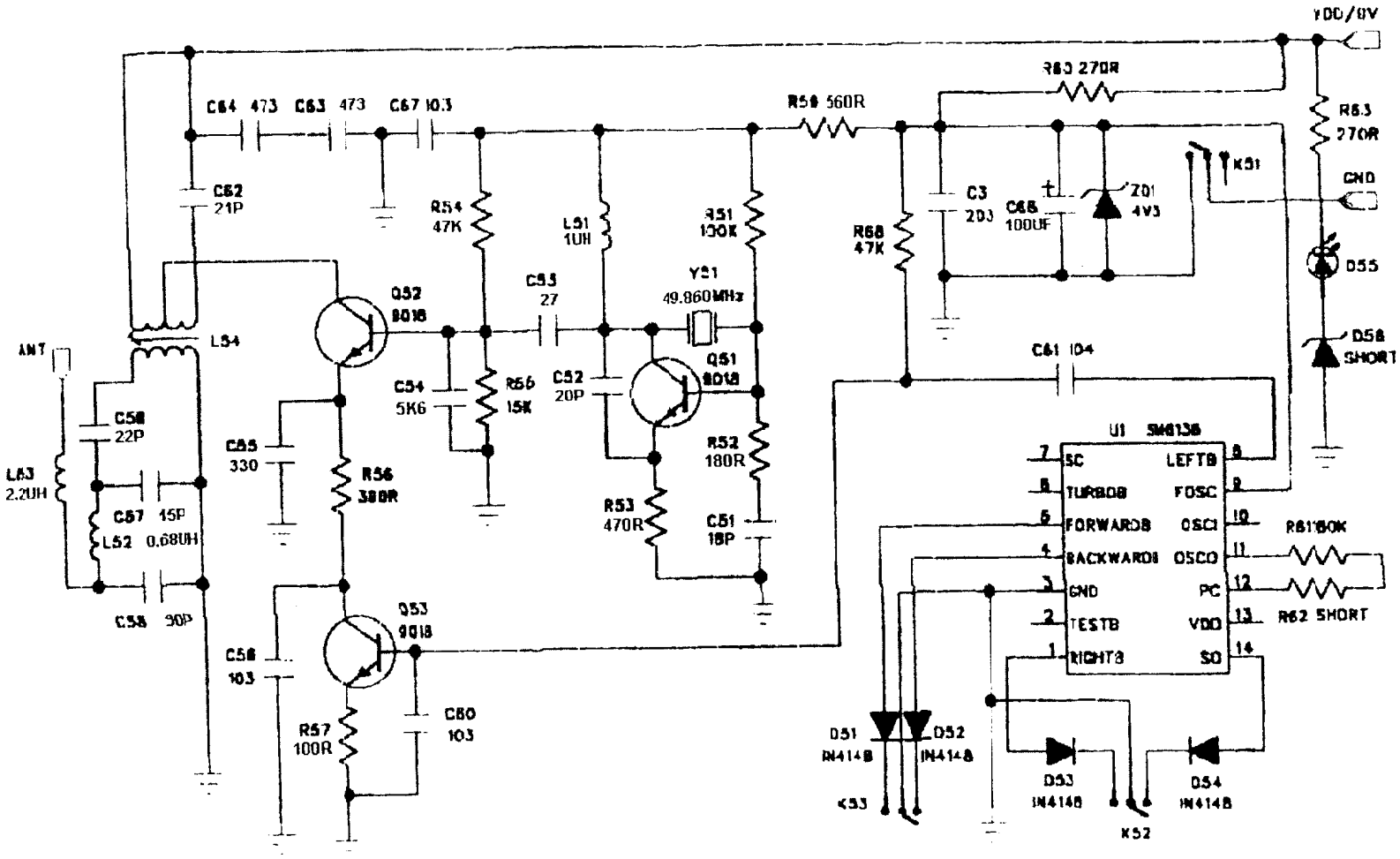

DATE:01-08-2004	REV:A
BSJ ELECTRONICS CO.LTD	