Schematic Diagram

AA/JBL

AVR21EN/ER600 VIDEO-3

REVISION RECORD		
NO.	Date	Contents

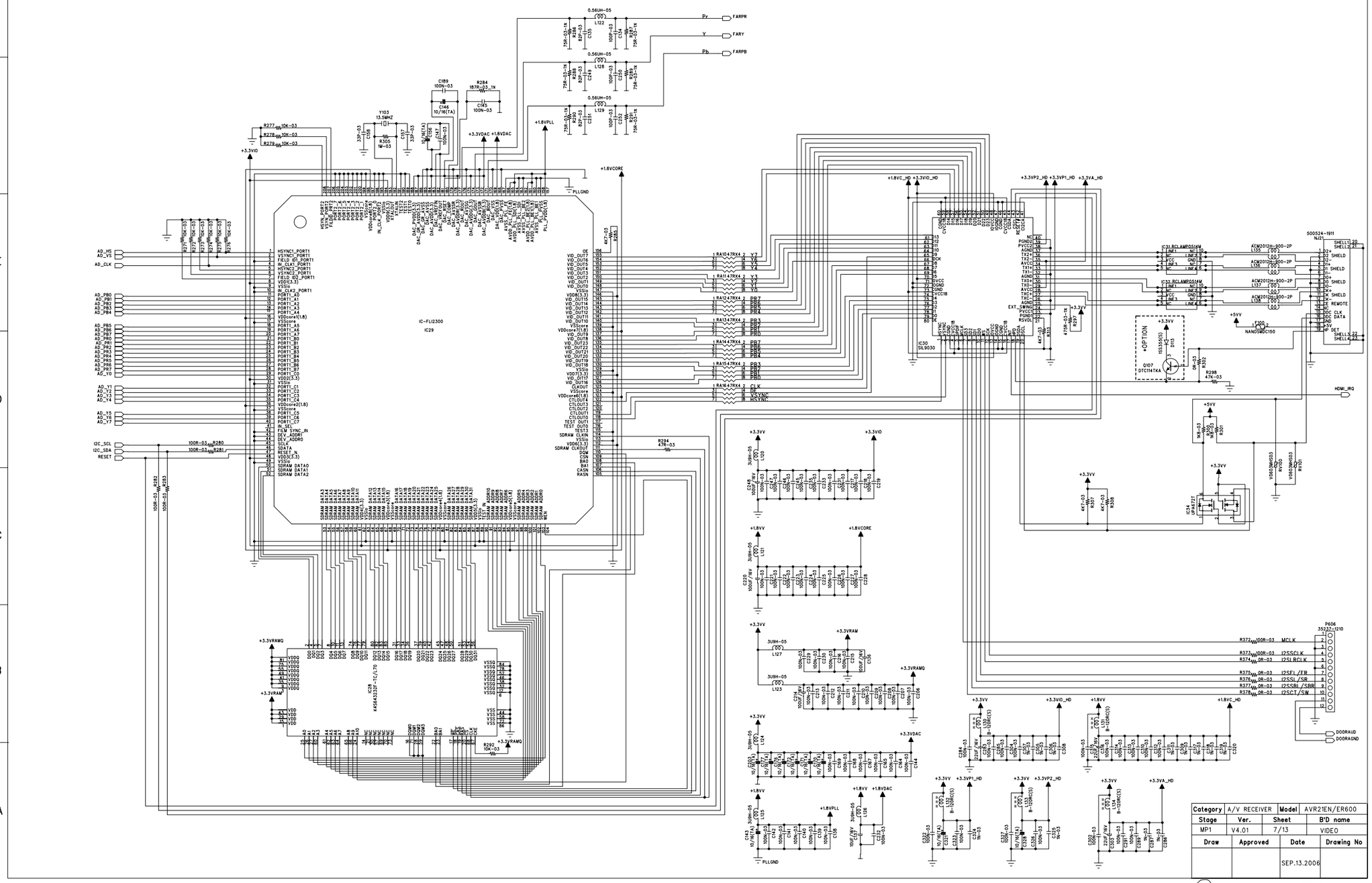

Category	A/V RECEIVER	Model	AVR21EN/ER600
Stage	Ver.	Sheet	B'D name
MP1	V4.01	7/13	VIDEO
Draw	Approved	Date	Drawing No
		SEP.13.2006	

DANECH COMPANY LTD.

Schematic Diagram

AA/JBL

AVR21EN/ER600 AMPLIFIER-1

REVISION RECORD		
NO.	Date	Contents

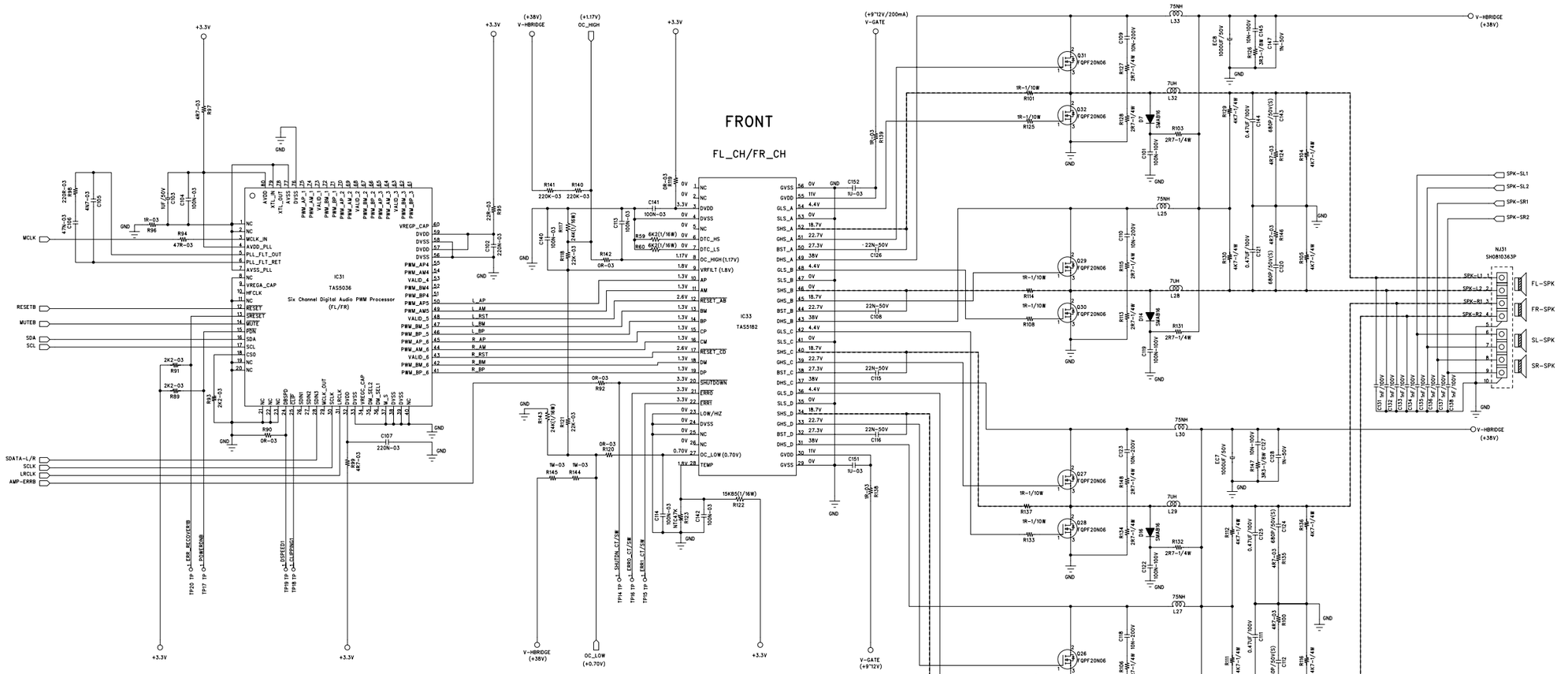

RECOMMENDED OPERATION CONDITIONS

GVDD TO GVSS	9.0~(12)~12.6V
DVDD to DVSS	3.0~(3.3)~3.6V
BST_A,BST_B,DST_C,BST_D	(50)~52.6V
DHS_A, DHS_B,DHS_C,DHS_D	(40)~42.0V
SHS_A,SHS_B,SHS_C,SHS_D	(40)~42.0V

TAS5182 STATUS SIGNALS

ERRO	ERR1	SHUTDOWN	DESCRIPTION
0	0	0	MULTIPLE ERROR(TAS5182 GATE OUTPUT LOW, MOSFET OUTPUTS HI-Z)
0	0	1	NOT VALID
0	1	0	OVERTEMPERATURE ERROR(TAS5182 GATE OUTPUT LOW, MOSFET OUTPUTS HI-Z)
0	1	1	OVERTEMPERATURE WARNING(NORMAL OPERATION)
1	0	0	OVERCURRENT ERROR(TAS5182 GATE OUTPUT LOW, MOSFET OUTPUTS HI-Z)
1	0	1	NOT VALID
1	1	0	GVDD UNDER VOLTAGE ERROR(TAS5182 GATE OUTPUT LOW, MOSFET OUTPUTS HI-Z)
1	1	1	NORMAL OPERATION

*Remark:Temp(28p);1. warning:at DVdd 36%(1.188V),2.Error:at Dvdd 23%0.759V)
:Undervoltage Protection:at under GVDD 7V

Category	A/V RECEIVER		Model	AVR21EN/ER600
Stage	Ver.	Sheet		B'D name
MP1	V401	8/13		AMPLIFIER
Draw	Approved	Date		Drawing No
		SEP.05.2006		

DANECH COMPANY LTD.

Schematic Diagram

AA/JBL

AVR21EN/ER600 AMPLIFER-2

REVISION RECORD		
NO.	Date	Contents

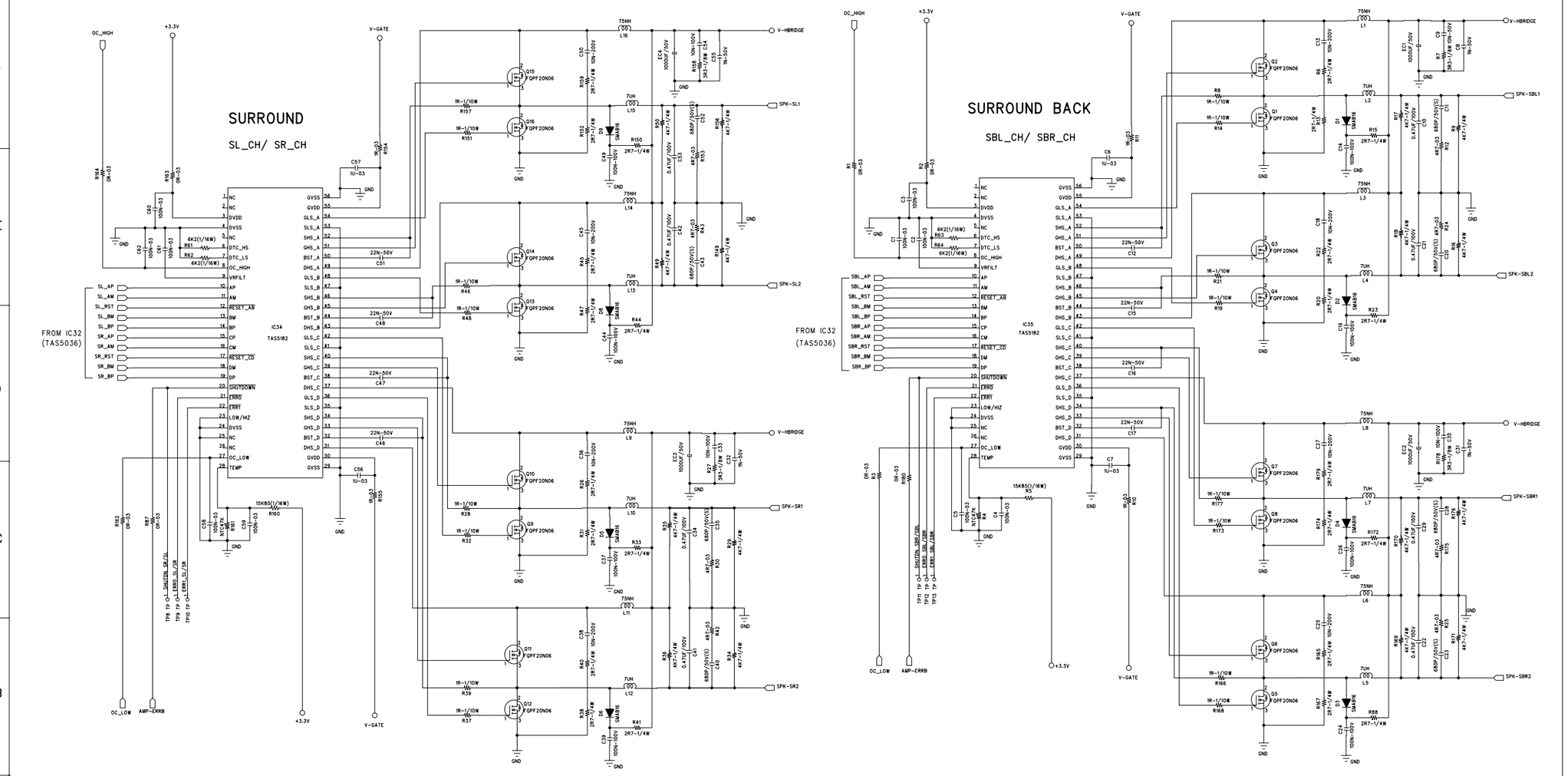

Category	A/V RECEIVER	Model	AVR21EN/ER600
Stage	Ver.	Sheet	B'D name
MP1	V4.01	9/13	AMPLIFIER
Draw	Approved	Date	Drawing No
		SEP.05.2006	

DANECH COMPANY LTD.

Schematic Diagram

AA/JBL

AVR21EN/ER600 AMPLIFER-3

REVISION RECORD		
NO.	Date	Contents

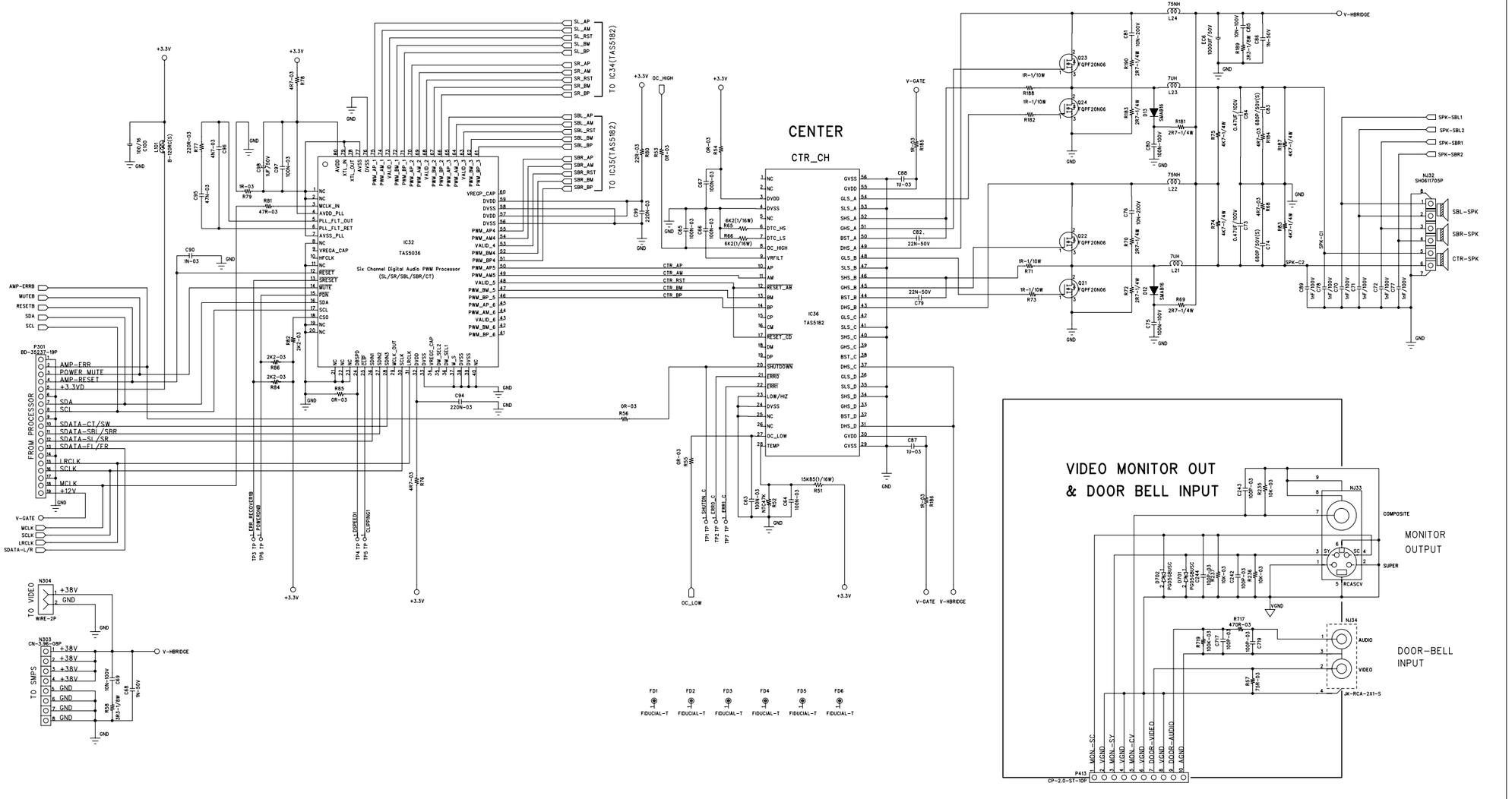

Category	AV RECEIVER	Model	AVR21EN/ER600
Stage	Ver.	Sheet	B'D name
MP1	V4.01	10/13	AMPLIFIER
Draw	Approved	Date	Drawing No
		SEP.05.2006	

DANECH COMPANY LTD.

Schematic Diagram

AA/JBL

AVR21EN/ER600 OUTLET

REVISION RECORD		
NO.	Date	Contents

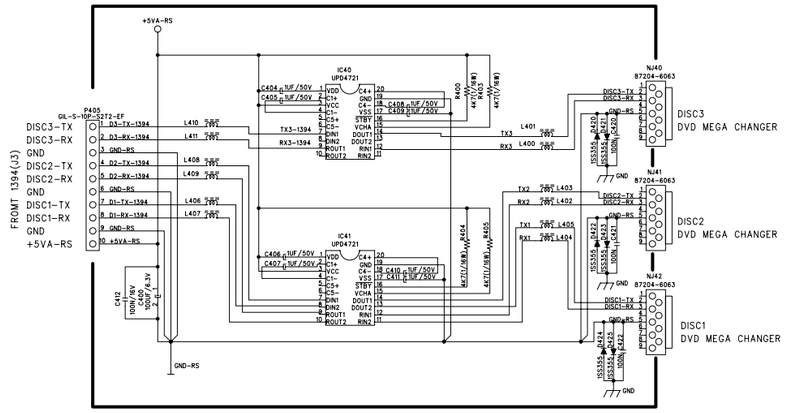

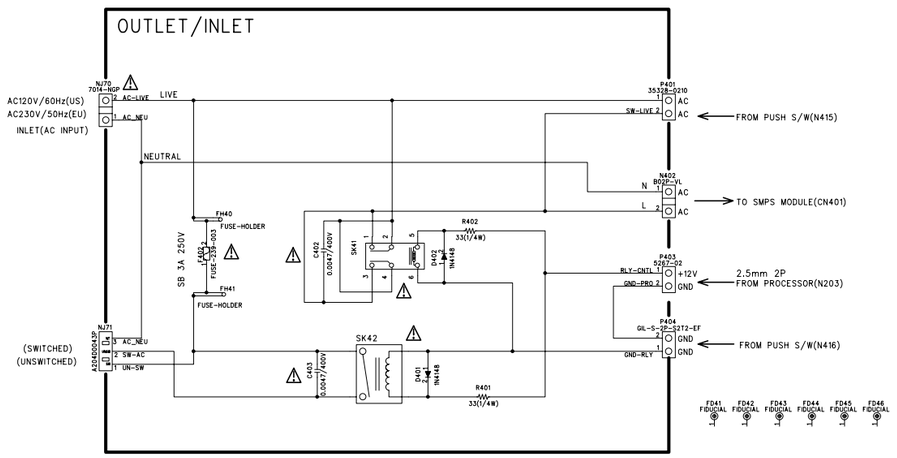

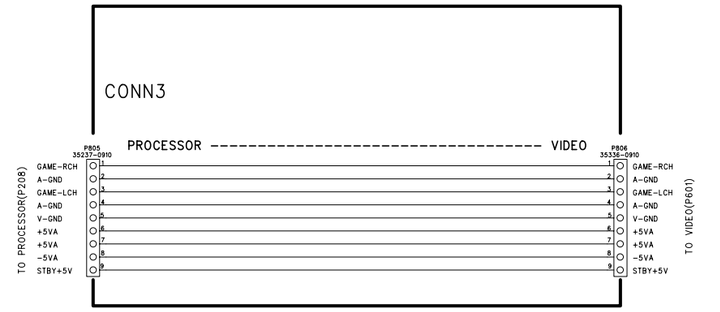

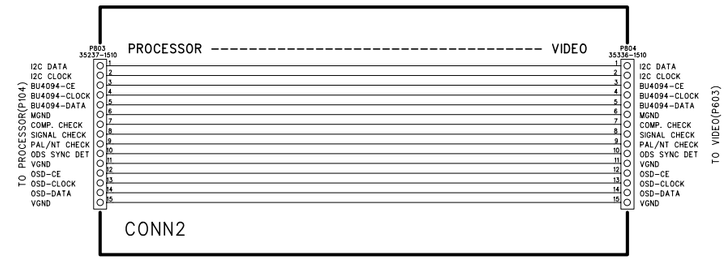

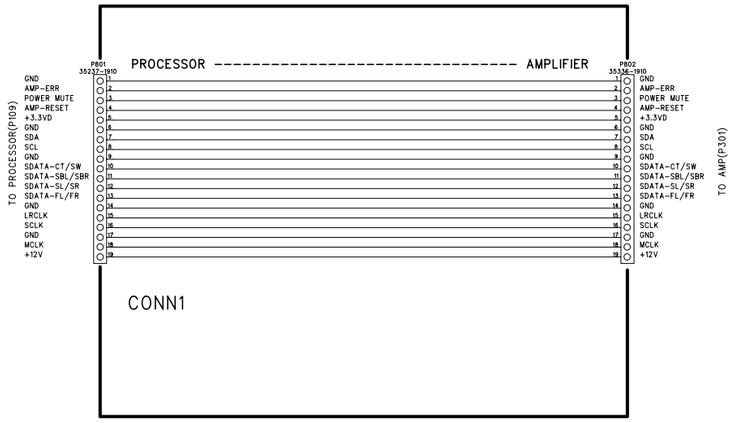

Category	A/V RECEIVER	Model	AVR21EN/ER600
Stage	Ver.	Sheet	B'D name
MP1	V4.01	11/13	OUTLET
Draw	Approved	Date	Drawing No
		SEP.05.2006	

DANECH COMPANY LTD.

Schematic Diagram

AA/JBL
AVR21EN/ER600 FLAG-IR

REVISION RECORD		
NO.	Date	Contents

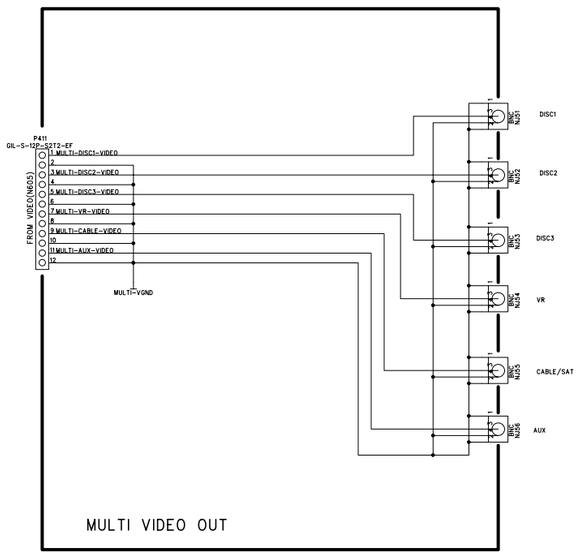

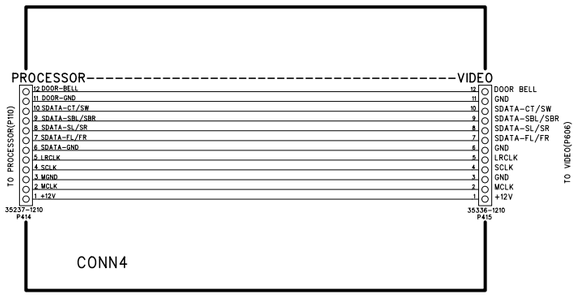

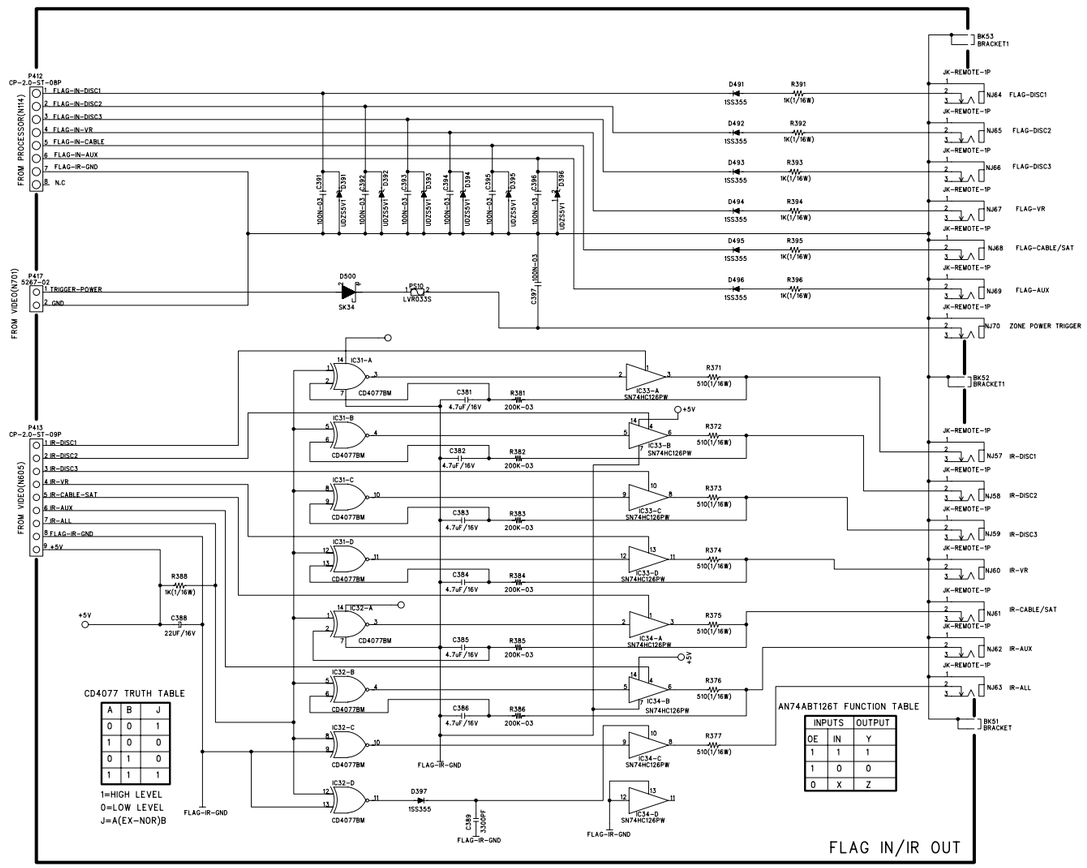

FD51 FIDUCIAL FD52 FIDUCIAL FD53 FIDUCIAL FD54 FIDUCIAL

Category	A/V RECEIVER	Model	AVR21EN/ER600
Stage	Ver.	Sheet	B'D name
MP1	V4.01	12/13	FLAG-IR
Draw	Approved	Date	Drawing No
		SEP.05.2006	

DANECH COMPANY LTD.

Schematic Diagram

AA/JBL

AVR21EN/ER600 Remote

REVISION RECORD			
NO.	Date	Contents	

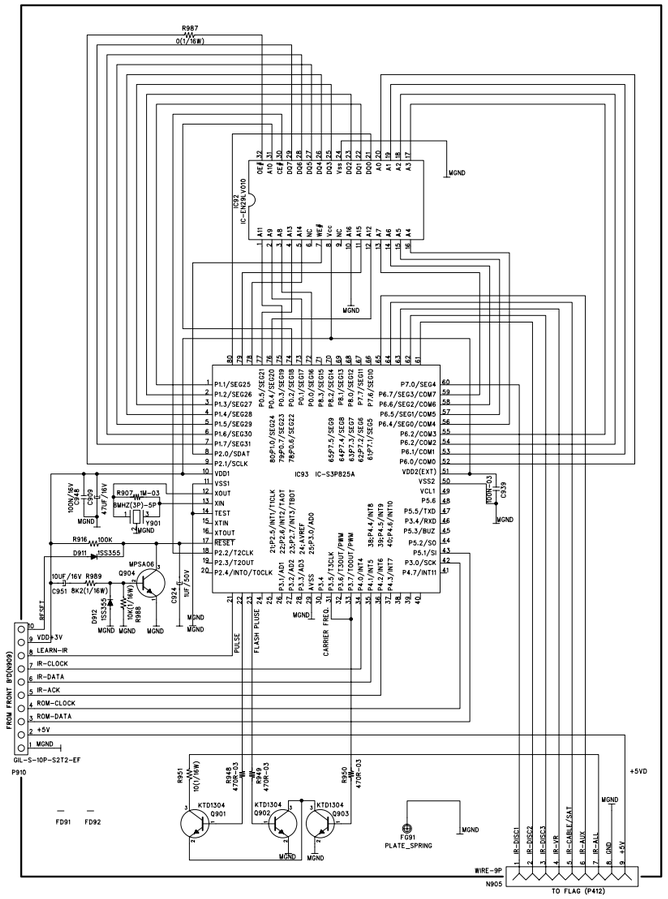

Category	A/V RECEIVER	Model	AVR21EN/ER600
Stage	Ver.	Sheet	B'D name
MP1	V4.01	13/13	REMOTE
Draw	Approved	Date	Drawing No
		SEP.05.2006	

DANECH COMPANY LTD.