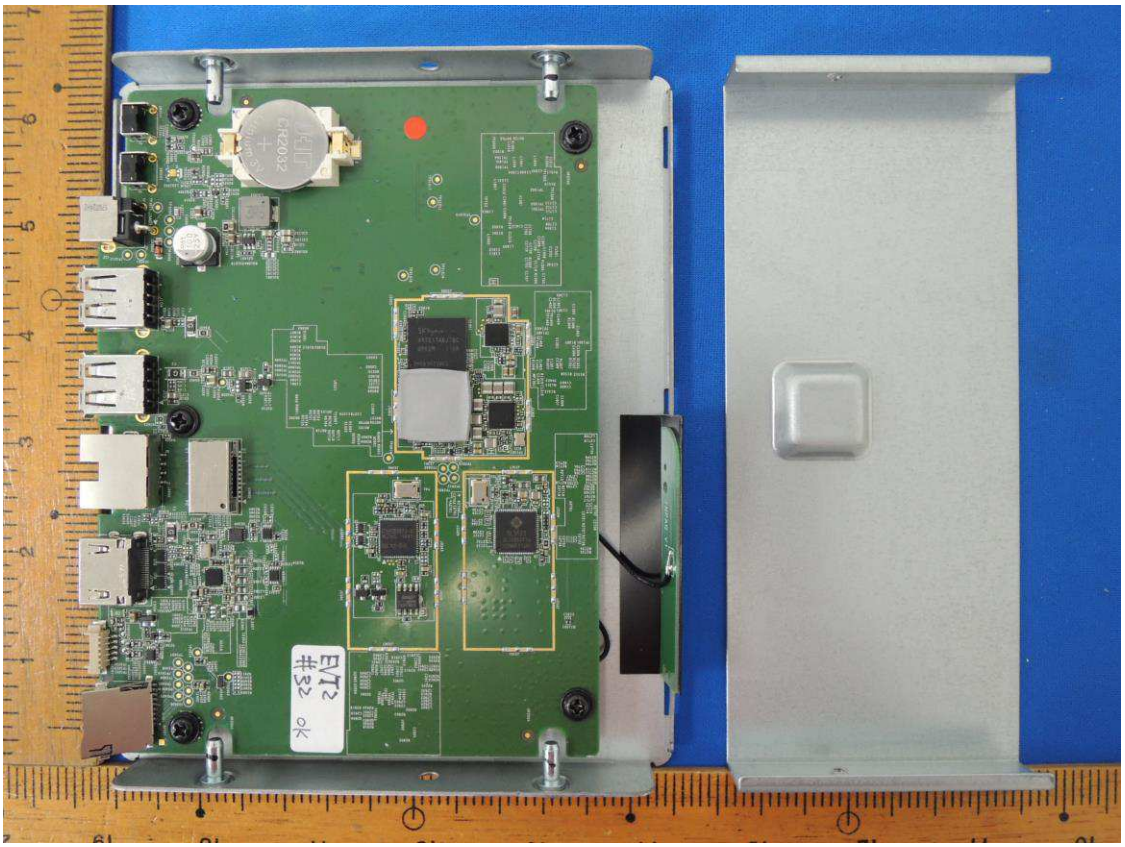
CR2032
ET2
#32
OK

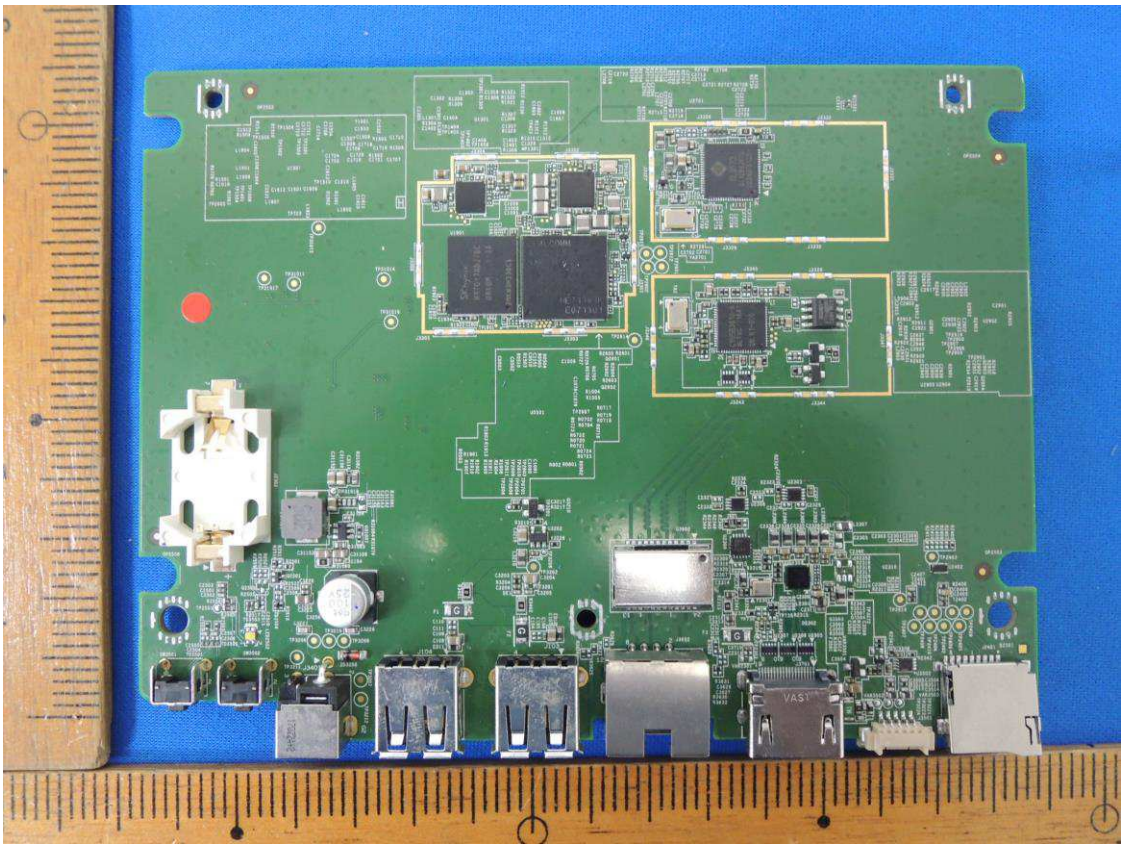

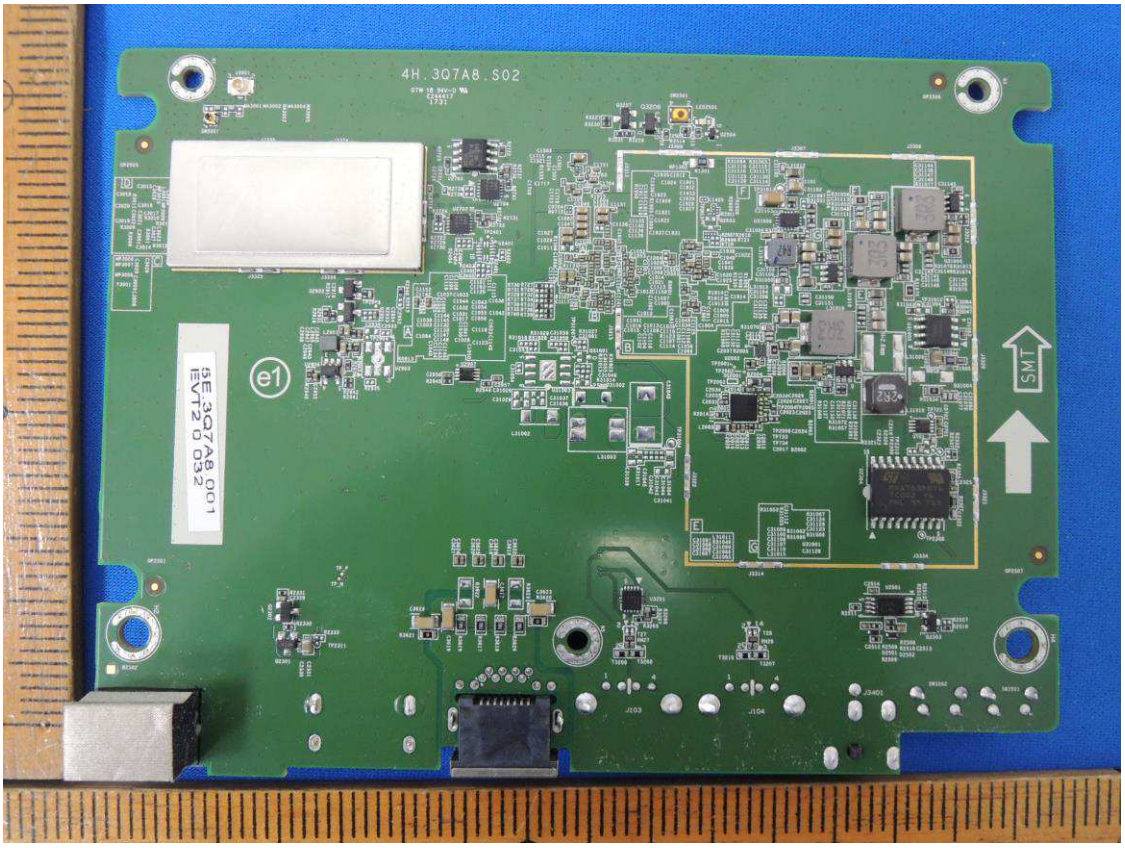
4H.3Q7A8.S02
5E.3Q7A8.001
EVT2 0 032
e1
SMT

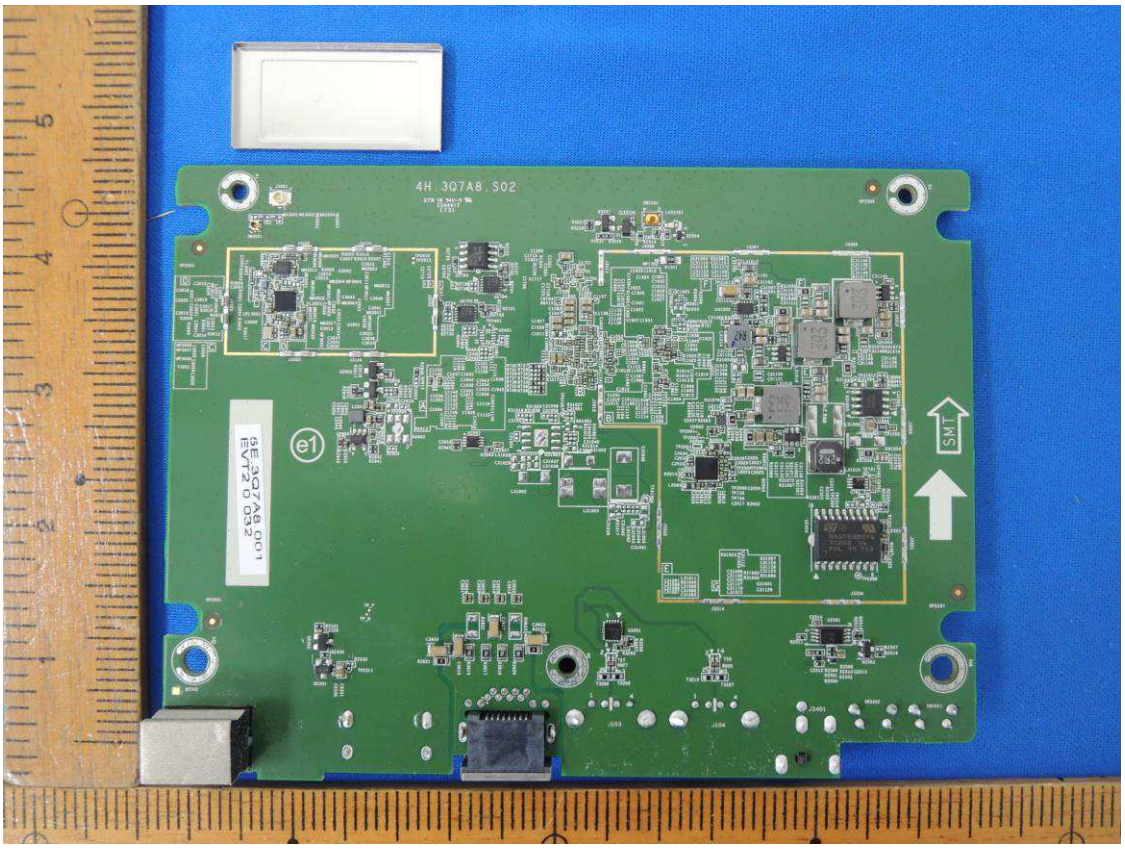
4H.3Q7A8.S02
TMS

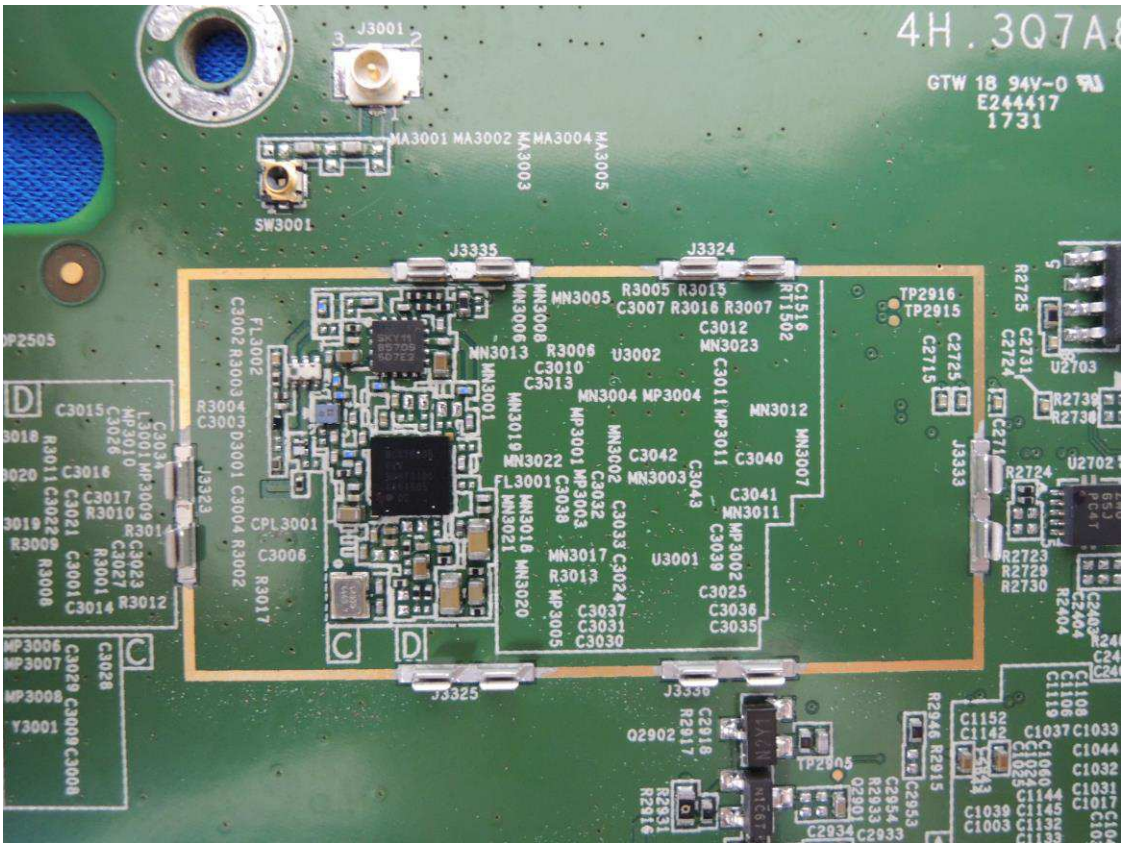
4H.3Q7A
GTW 18 94V-0
E244417
1731
J3001
SW3001
J3335
J3324
J3325
J3333
J3323