REVISION RECORD			
LTR	ECO NO:	APPROVED:	DATE:

Confidencial Announcement

All rights reserved. Passing on or copying of this document, use and communication of its contents not permitted without written authorization from T&A.

DRAWN: Su haibo	DATED:	COMPANY: JRDC U7C	
CHECKED:	DATED:	TITLE: confidencial announcement	
QUALITY CONTROL:	DATED:	CODE:	SIZE: DRAWING NO: REV:
RELEASED: V1.2	DATED: 2007-3-8	SCALE:	SHEET: 1 OF 5

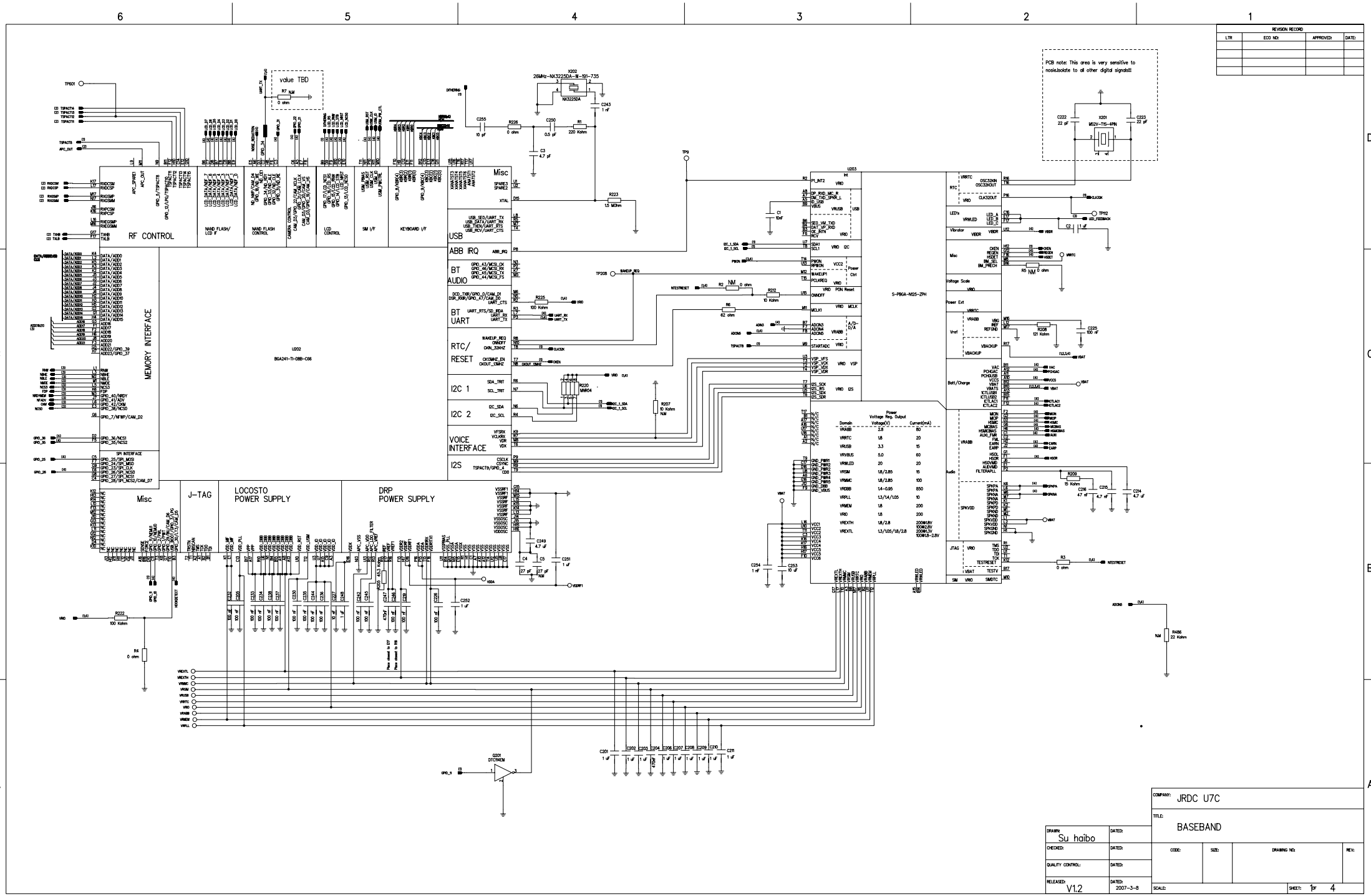

REVISION RECORD
LTR
ECO NO:
APPROVED:
DATE:
PCB note: This area is very sensitive to nosie,Isolate to all other digital signals!!!
RF CONTROL
MEMORY INTERFACE
NAND FLASH/ LCD IF
NAND FLASH CONTROL
LCD CONTROL
SIM I/F
KEYBOARD I/F
Misc
USB
ABB IRQ
BT AUDIO
BT UART
RTC/ RESET
I2C 1
I2C 2
VOICE INTERFACE
I2S
J-TAG
LOCOSTO POWER SUPPLY
DRP POWER SUPPLY
Power Voltage Reg. Output
Domain
Voltage(V)
Current(mA)
S-PBGA-N25-ZPH
COMPANY: JRDC U7C
TITLE: BASEBAND
DRAWN: Su haibo
DATED:
CHECKED:
QUALITY CONTROL:
RELEASED: V1.2
2007-3-8
CODE:
SIZE:
DRAWING NO:
REV:
SCALE:
SHEET: 1 OF 4

REVISION RECORD			
LTR	ECO NO:	APPROVED:	DATE:

control logic

Mode	VLOGIC	TX_EN	BS
STANDBY	0	X	X
GSM_RX	1	0	0
DCS_RX	1	0	1
GSM_TX	1	1	0
DCS_TX	1	1	1

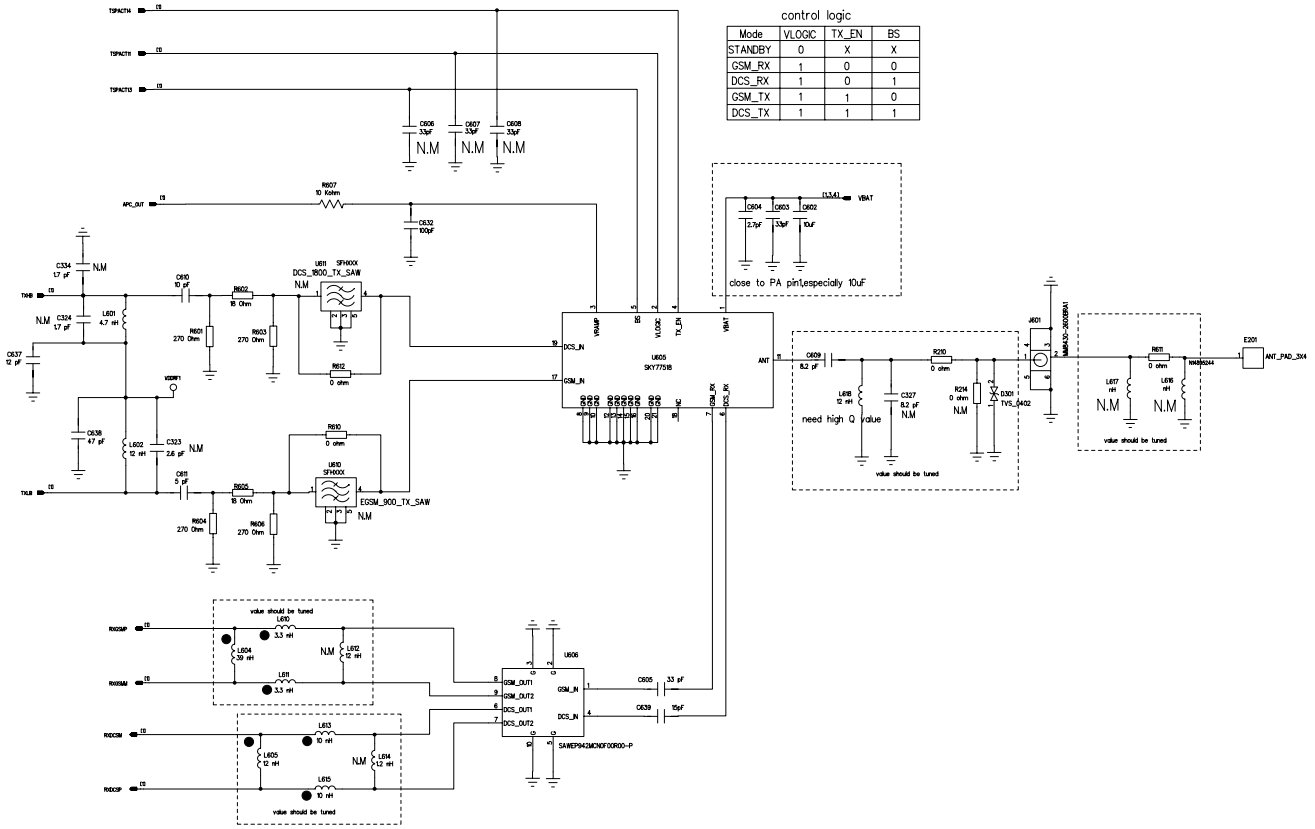

DRAWN: Su haibo	DATE:	COMPANY: JRDC U7C			
CHECKED:	DATE:	TITLE: RF			
QUALITY CONTROL:	DATE:	CODE:	SIZE:	DRAWING NO:	REV:
RELEASED: V1.2	DATE: 2007-3-8	SCALE:		SHEET: 2 OF 4	

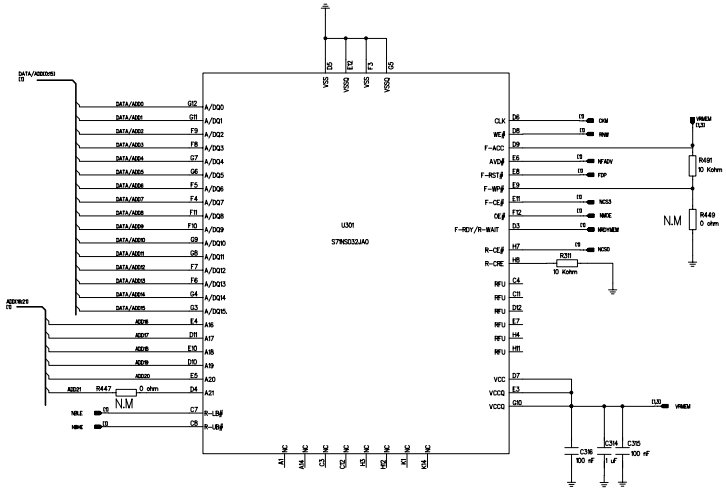

memory

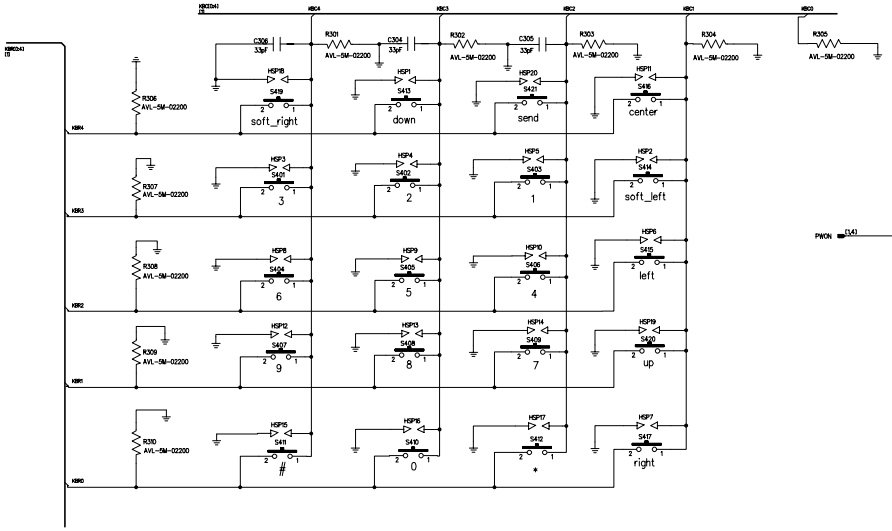

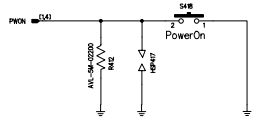

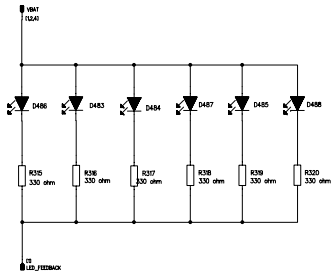

keys

REVISION RECORD			
LTR	ECO NO:	APPROVED:	DATE:

COMPANY: JRDC U7C			
TITLE: MEMORY			
DRAWN: Su haibo	DATED:	CODE:	SIZE: DRAWING NO: REV:
CHECKED:	DATED:		
QUALITY CONTROL:	DATED:		
RELEASED: V1.2	DATED: 2007-3-8	SCALE:	SHEET: 3F 4

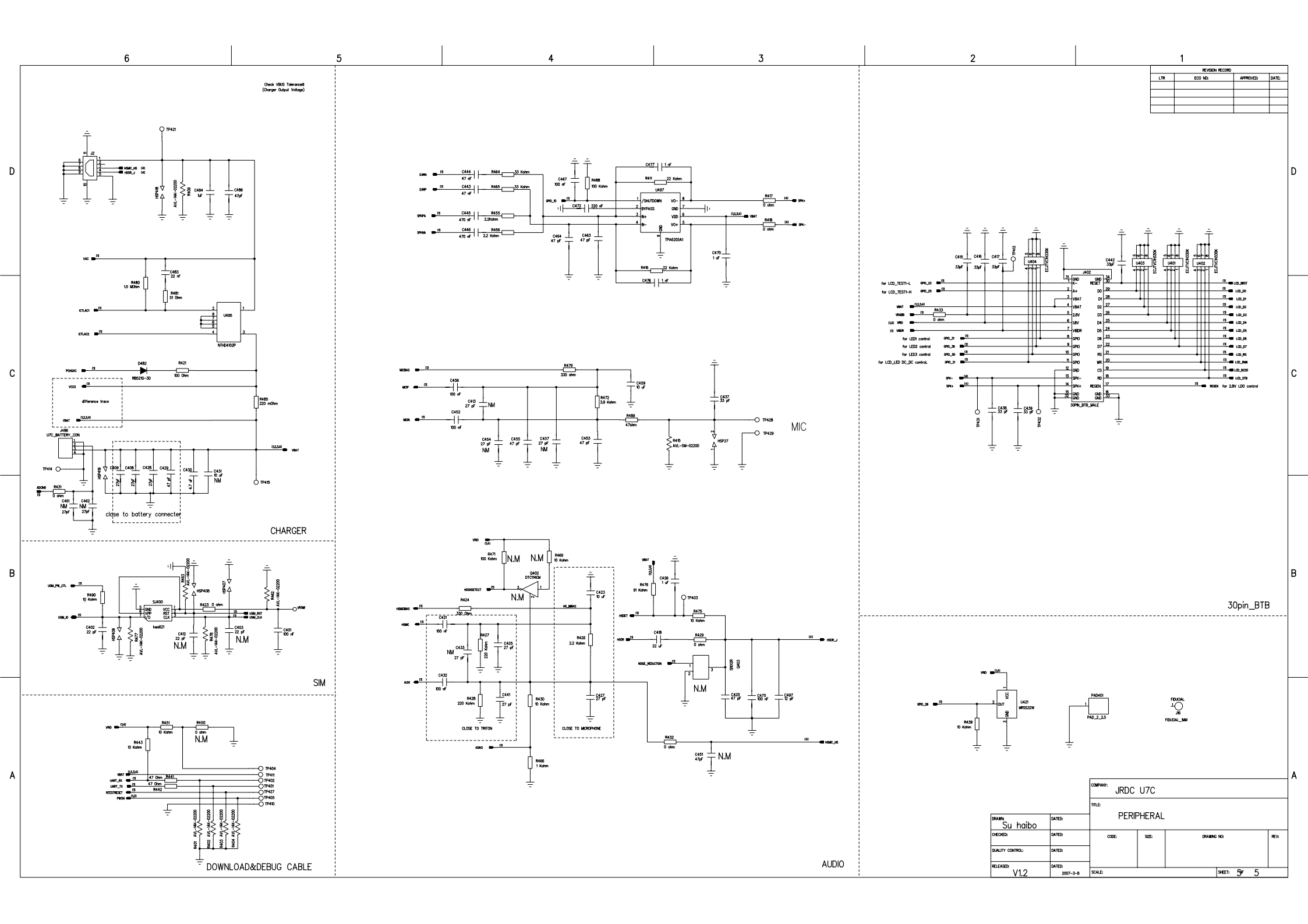
Check VBUS Tolerance!!
(Charger Output Voltage)
close to battery connecter
CHARGER
SIM
DOWNLOAD&DEBUG CABLE
MIC
AUDIO
CLOSE TO TRITON
CLOSE TO MICROPHONE
30pin_BTB
REVISION RECORD
LTR
ECO NO:
APPROVED:
DATE:
COMPANY: JRDC U7C
TITLE: PERIPHERAL
DRAWN: Su haibo
CHECKED:
QUALITY CONTROL:
RELEASED: V1.2
DATED: 2007-3-8
CODE:
SIZE:
DRAWING NO:
REV:
SCALE:
SHEET: 5 OF 5