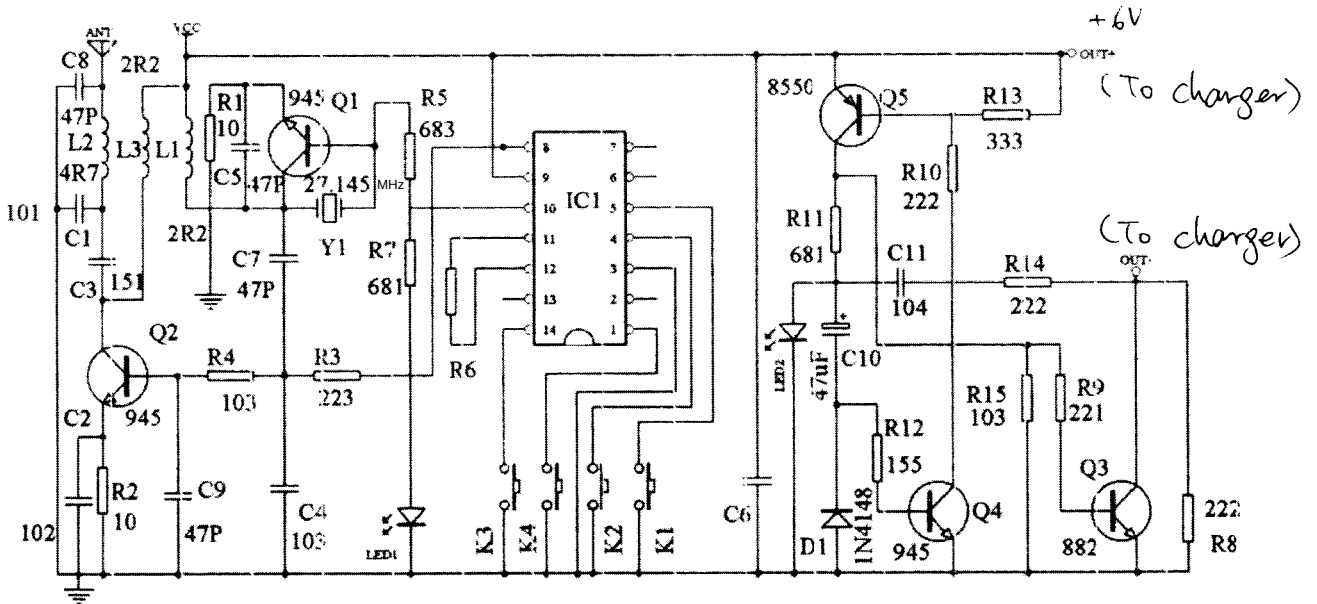

Title		
Size A4	Number 27MHz TX	Revision
Date: 14-Jun-2004		Sheet of
File: E:\PCB\CMT0528.DDB		Drawn By: