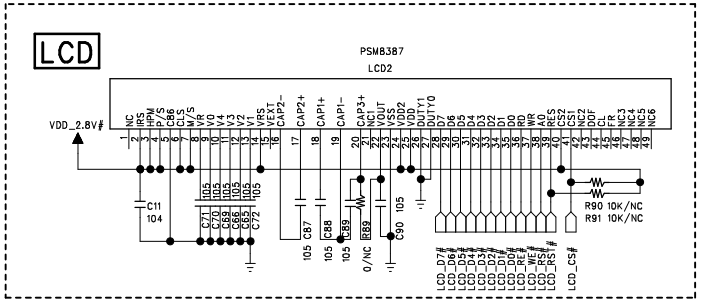

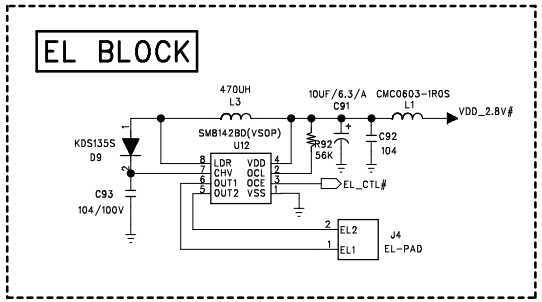

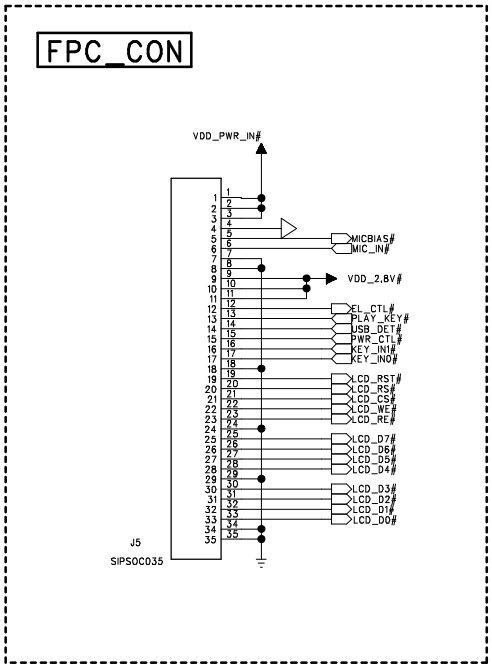

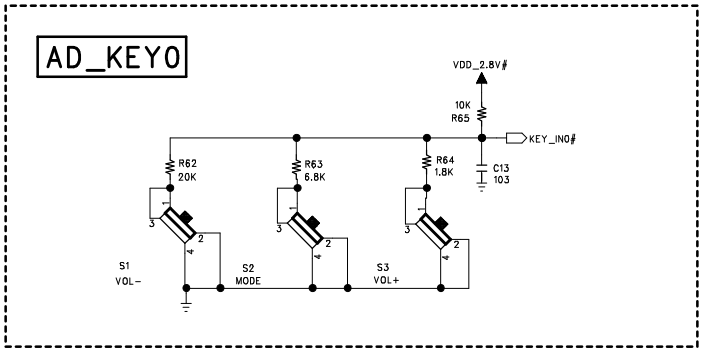

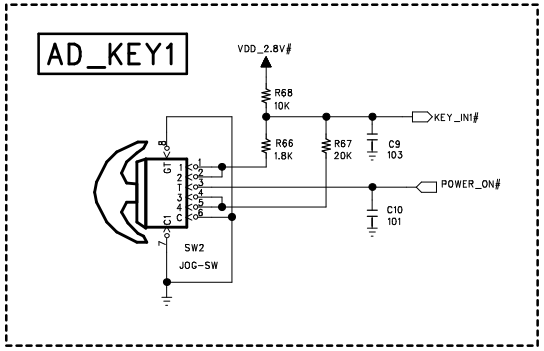

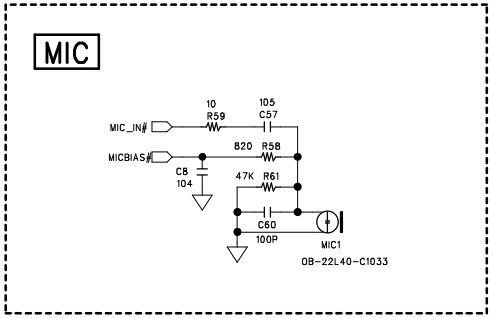

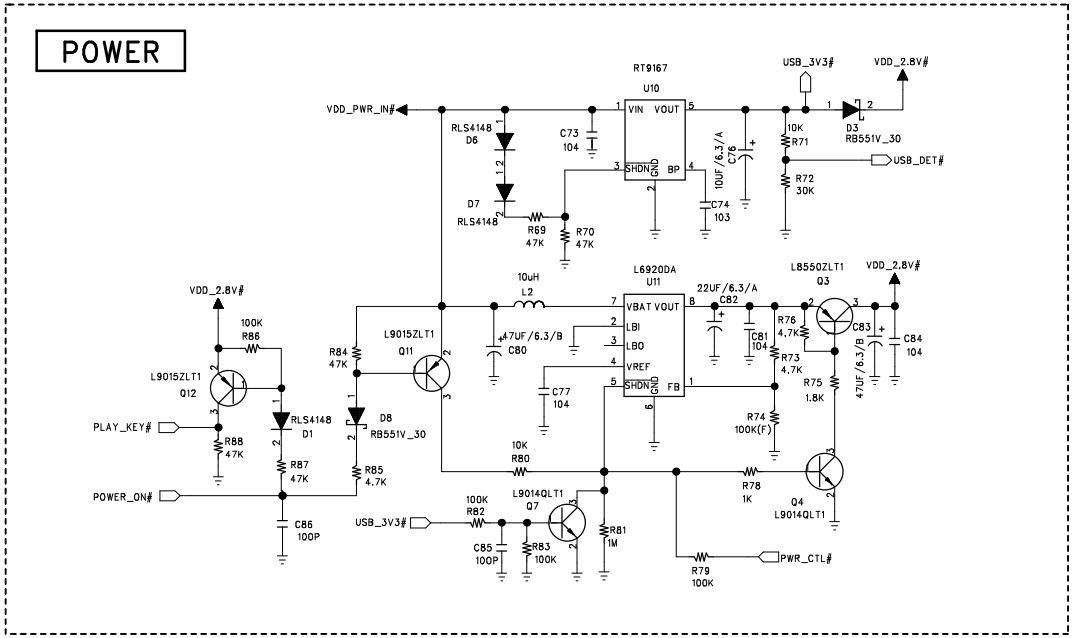

0	INITIAL ISSUE
REVISION	DESCRIPTION

ANTONIO PRECISE PRODUCTS MANUFACTORY LTD

TITLE : MP86-HAV01 (LCD BOARD)		REV: 0
Prepeared by : ANDREW LUI	Checked by :	Approved by :
Date : 22-6-2005	DWG NO. MP86E024	Sheet : 1 OF 1

Form - EN043A

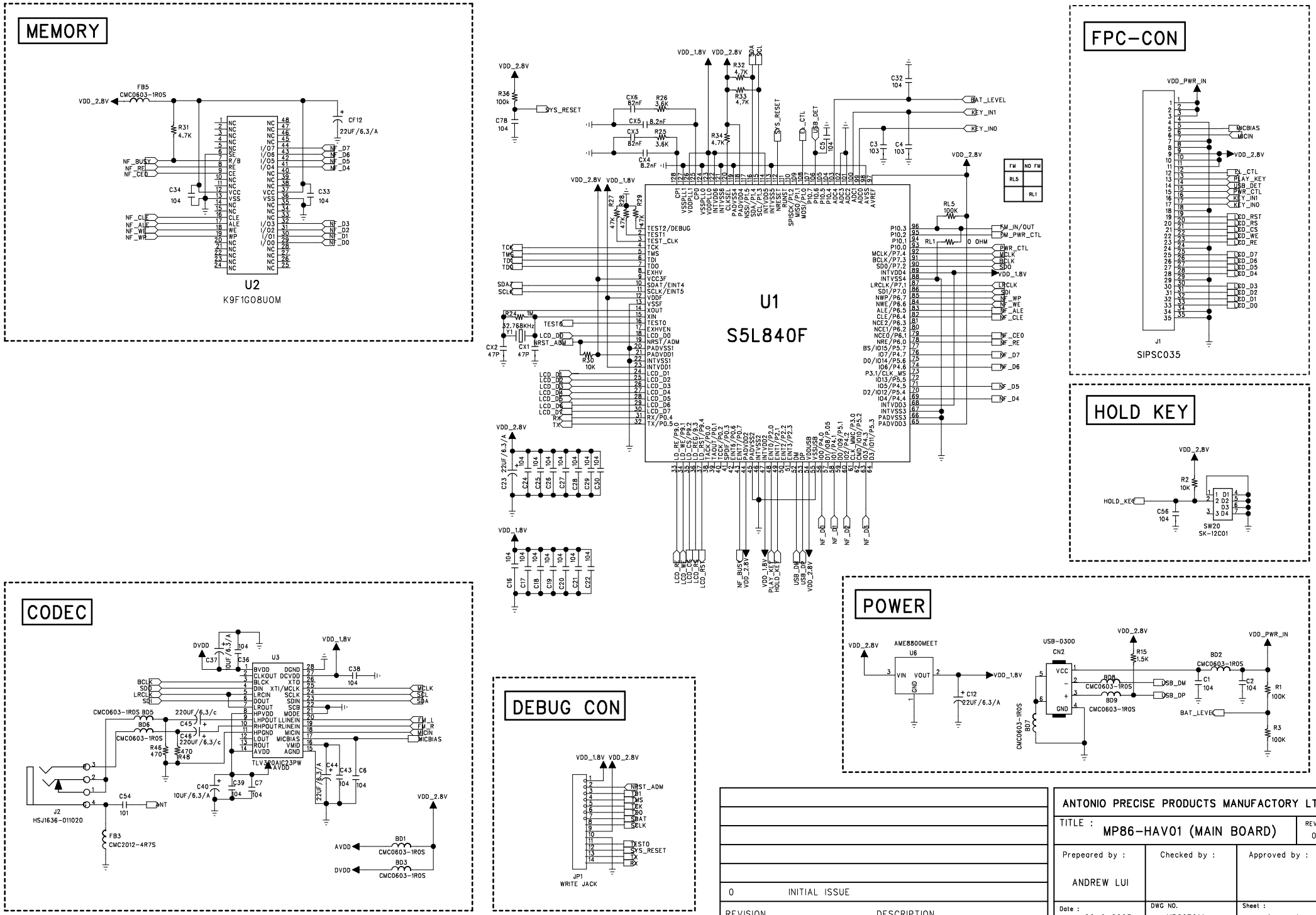
MEMORY
U2
K9F1G08UOM
U1
S5L840F
FPC-CON
SIPSC035
HOLD KEY
SW20
SK-12C01
CODEC
DEBUG CON
WRITE JACK
POWER
AME8800MEET
USB-0300
ANTONIO PRECISE PRODUCTS MANUFACTORY LTD
TITLE : MP86-HAV01 (MAIN BOARD)
REV: 0
Prepeared by : ANDREW LUI
Checked by :
Approved by :
Date : 22-6-2005
DWG NO. MP86E014
Sheet : 1 OF 1
0 INITIAL ISSUE
REVISION DESCRIPTION
Form - EN043A