WATCH GMRS X33X BLOCK DIAGRAM

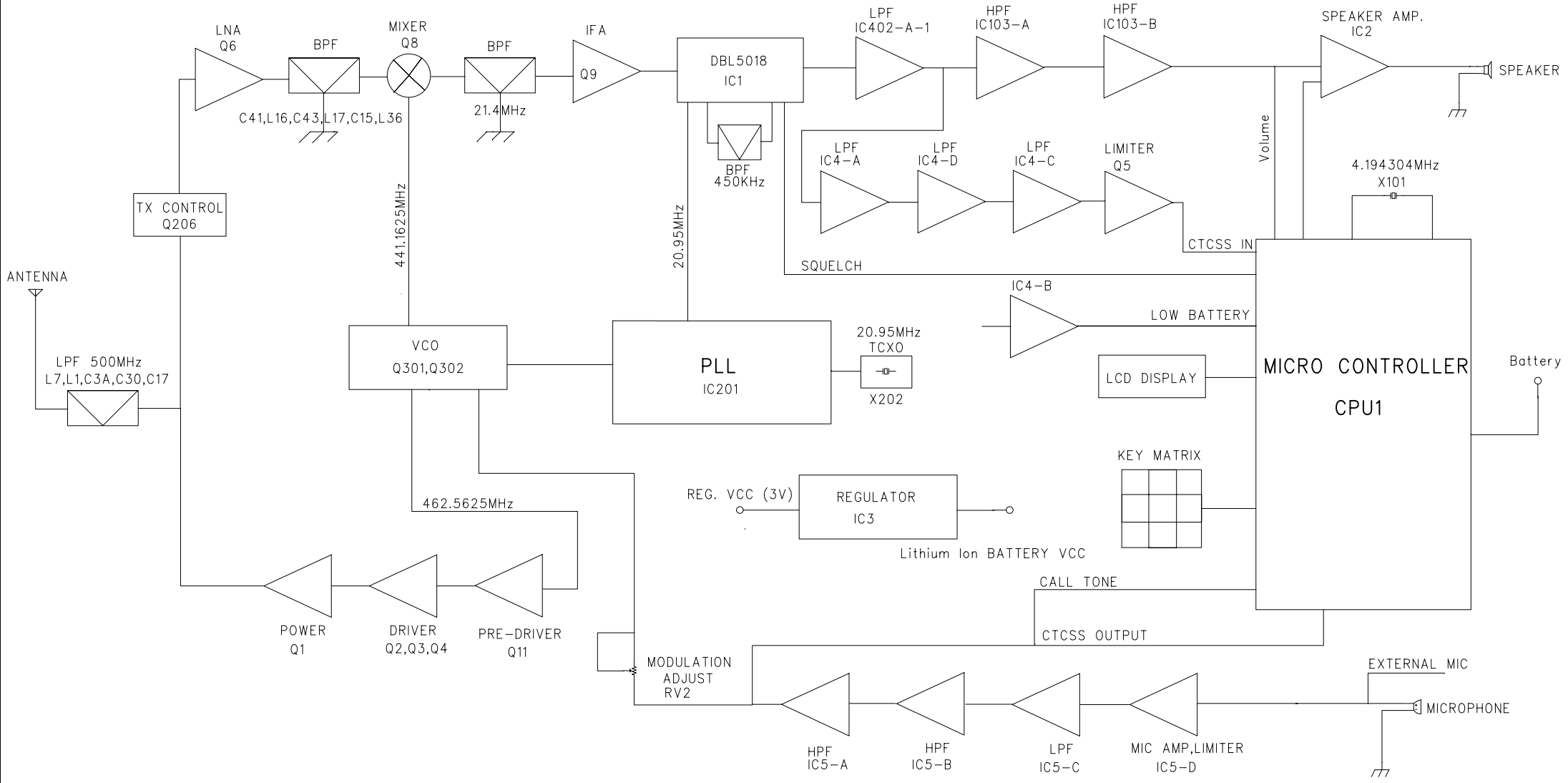

BLOCK DIAGRAM				
Title	X33X_BLK.SCH			
Drawn	Sheet	Drawing No	PCB No	REV 1.0