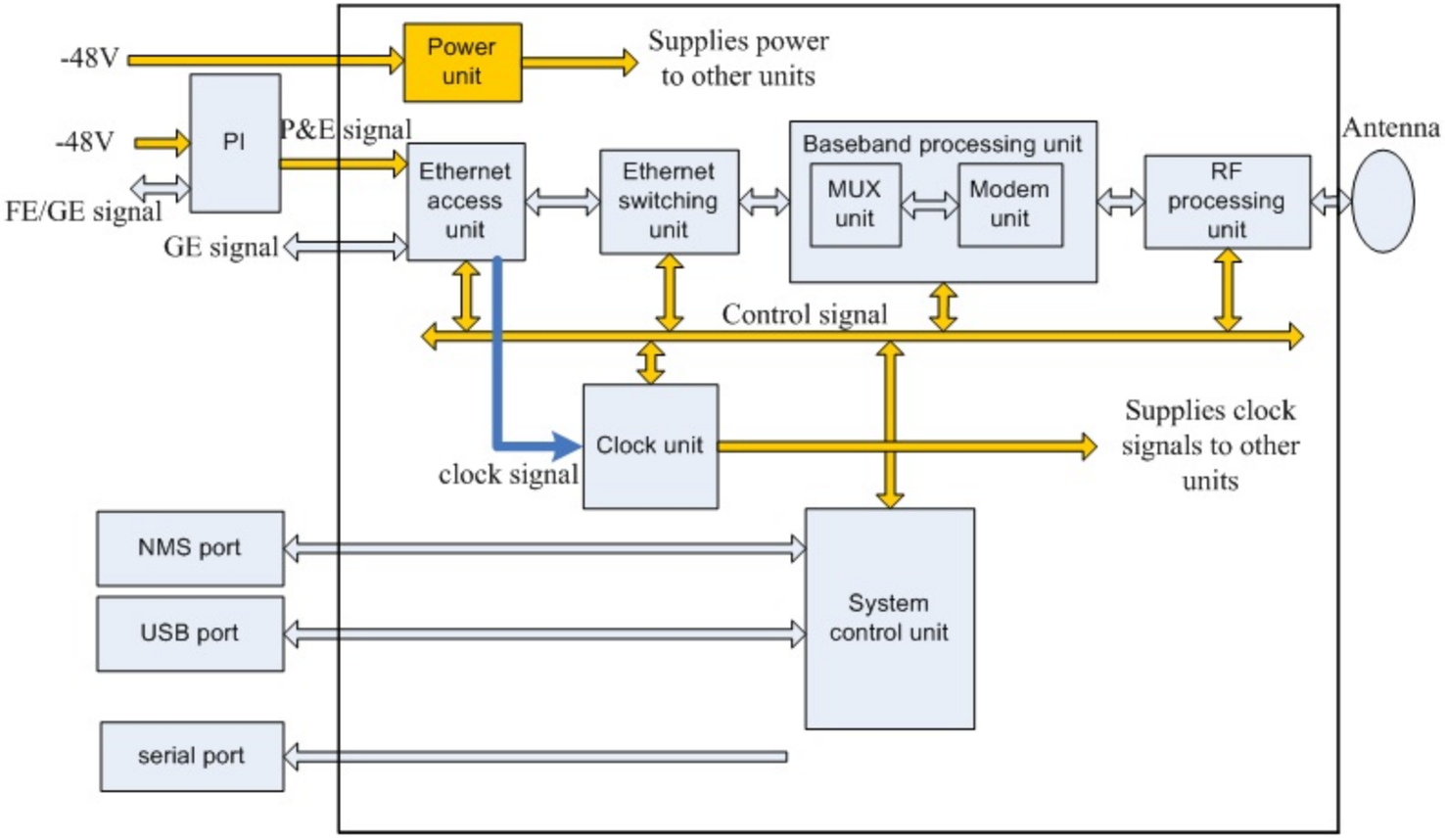
-48V
Power unit
Supplies power to other units
-48V
PI
P&E signal
FE/GE signal
GE signal
Ethernet access unit
Ethernet switching unit
Baseband processing unit
MUX unit
Modem unit
RF processing unit
Antenna
Control signal
Clock unit
clock signal
Supplies clock signals to other units
NMS port
USB port
serial port
System control unit

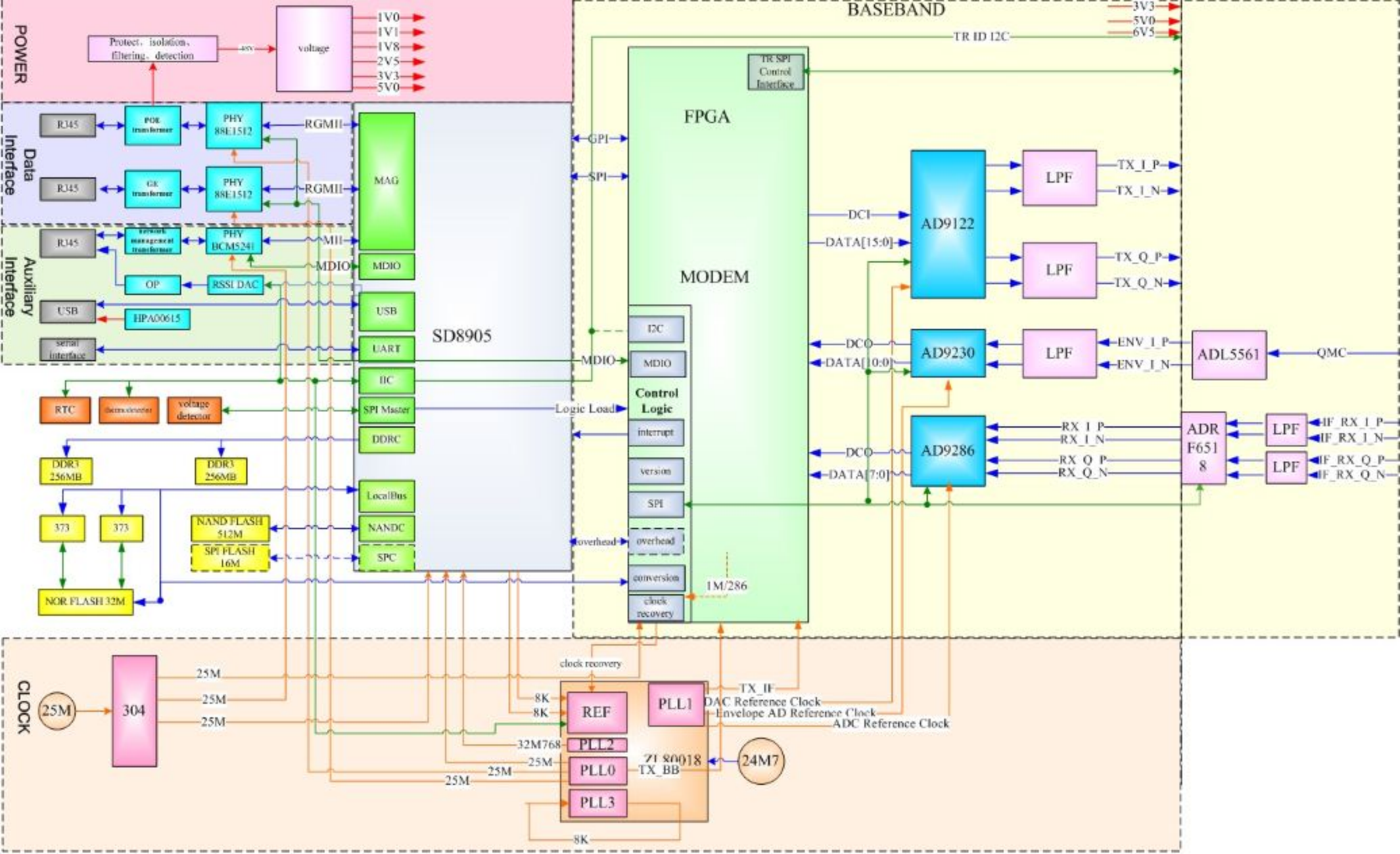
POWER
Protect、isolation、filtering、detection
voltage
1V0
1V1
1V8
2V5
3V3
5V0
BASEBAND
3V3
5V0
6V5
TR ID I2C
TR SPI Control Interface
FPGA
MODEM
Data Interface
R45
POE transformer
PHY 88E1512
RGMII
R45
GE transformer
PHY 88E1512
RGMII
MAG
Auxiliary Interface
R45
network management transformer
PHY BCM5241
MII
MDIO
OP
RSSI DAC
USB
HPA00615
serial interface
SD8905
MDIO
USB
UART
IIC
SPI Master
DDRC
LocalBus
NANDC
SPC
RTC
voltage detector
DDR3 256MB
DDR3 256MB
373
373
NAND FLASH 512M
SPI FLASH 16M
NOR FLASH 32M
GPI
SPI
MDIO
Logic Load
overhead
I2C
MDIO
Control Logic
interrupt
version
SPI
overhead
conversion
clock recovery
1M/286
DCI
DATA[15:0]
AD9122
LPF
TX_I_P
TX_I_N
LPF
TX_Q_P
TX_Q_N
DCO
DATA[10:0]
AD9230
LPF
ENV_I_P
ENV_I_N
ADL5561
QMC
DCO
DATA[7:0]
AD9286
RX_I_P
RX_I_N
RX_Q_P
RX_Q_N
ADR F6518
LPF
IF_RX_I_P
IF_RX_I_N
LPF
IF_RX_Q_P
IF_RX_Q_N
CLOCK
25M
304
25M
25M
25M
clock recovery
8K
8K
REF
PLL1
TX_IF
DAC Reference Clock
Envelope AD Reference Clock
ADC Reference Clock
32M768
PLL2
25M
PLL0
25M
25M
ZL 80018
TX_BB
24M7
PLL3
8K