Smart Device Simple World

Thank you for choosing HUAWEI Mobile WiFi

Supported functions and actual appearance depend on the specific models you purchased. The illustrations are provided for your reference only. For details about the model you selected, consult your service provider.

This guide briefly describes the functions of the Mobile WiFi. For details about how to set management parameters, see help on the web management page.

Copyright © Huawei Technologies Co., Ltd. 2011. All rights reserved.
THIS DOCUMENT IS FOR INFORMATION PURPOSE ONLY, AND DOES NOT CONSTITUTE ANY KIND OF WARRANTIES.

Getting to Know HUAWEI Mobile WiFi

Connection Scenarios

A Wi-Fi device or computer can be connected to the Internet through the Mobile WiFi. The actual connection procedure depends on the operating system of the Wi-Fi device or computer. The connection scenarios illustrated here are for your reference.

Scenario 1: Multi-device access via Wi-Fi

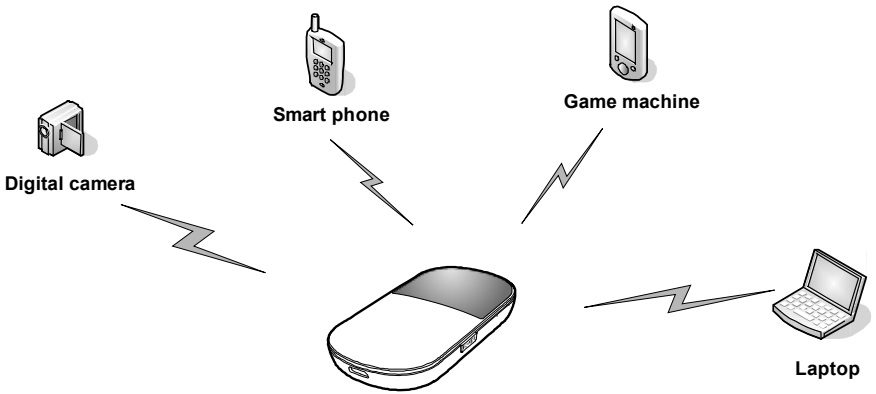

Scenario 2: One-device access via USB

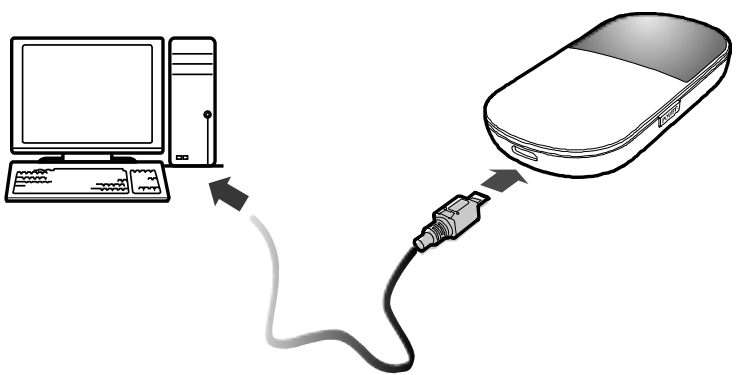

Scenario 3: Multi-device access via Wi-Fi and USB at the same time

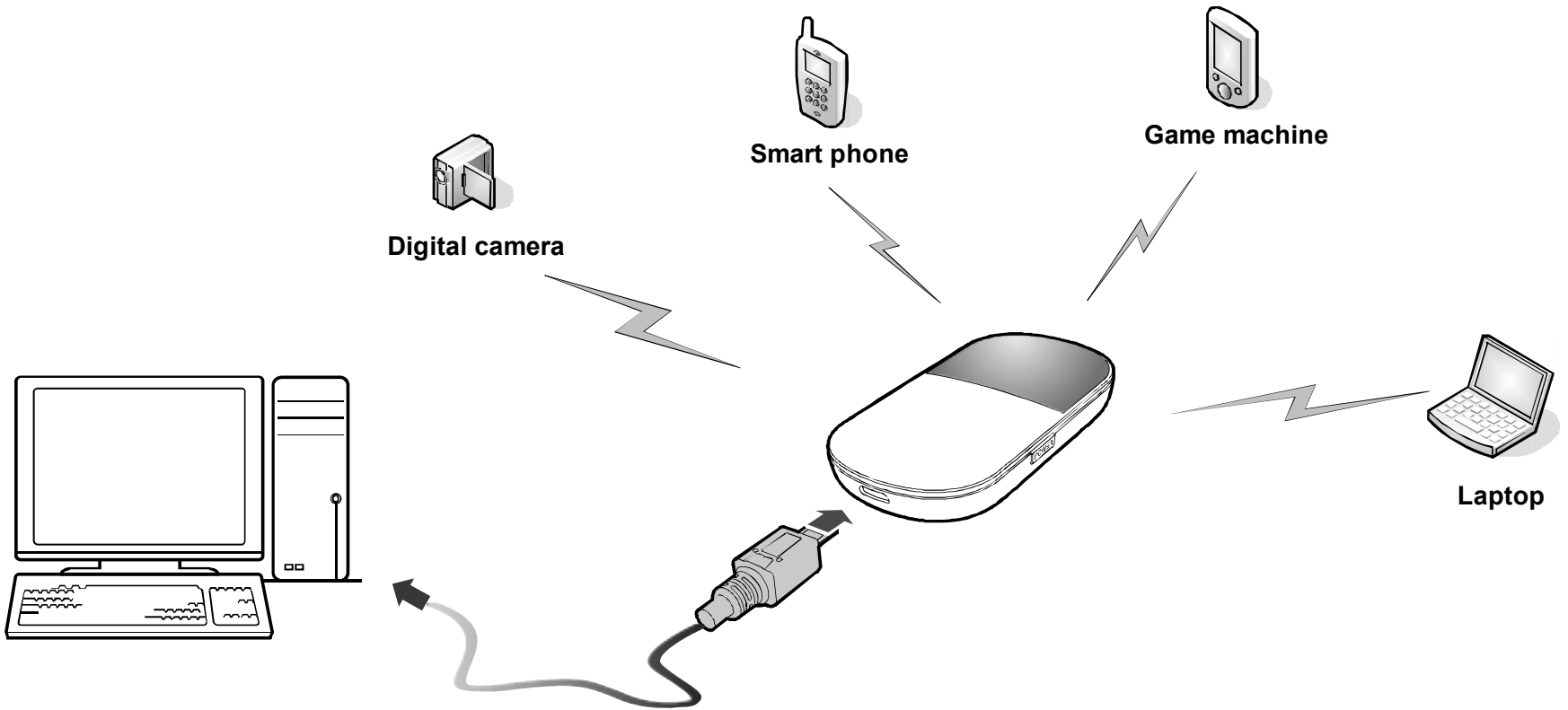

Appearance

No.	Item
1	Screen
2	Power button
3	USB port
4	microSD card slot
5	Battery button
6	Strap hole

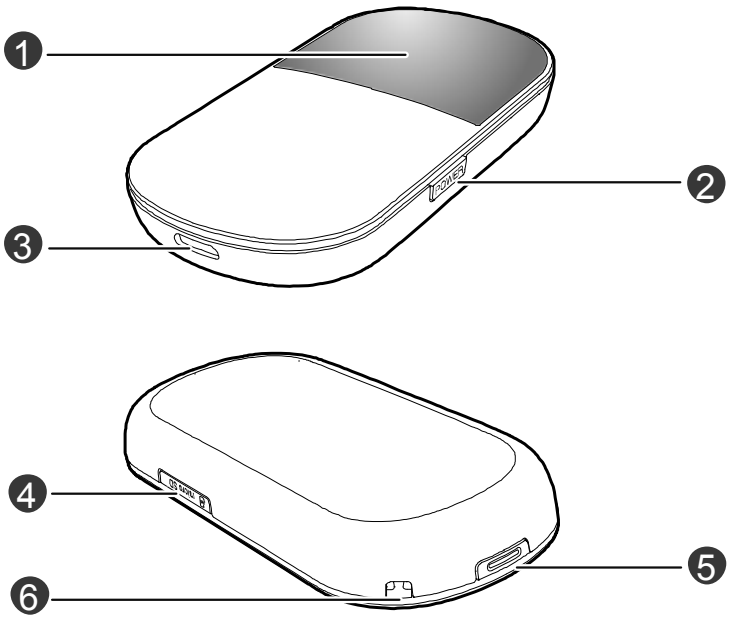

Screen

No.	Item
1	Signal strength
2	Network
3	• Wi-Fi enabled • Number of devices connected
4	• New messages • Number of new messages
5	Battery level
6	International roaming state
7	• Traffic data • Connection duration

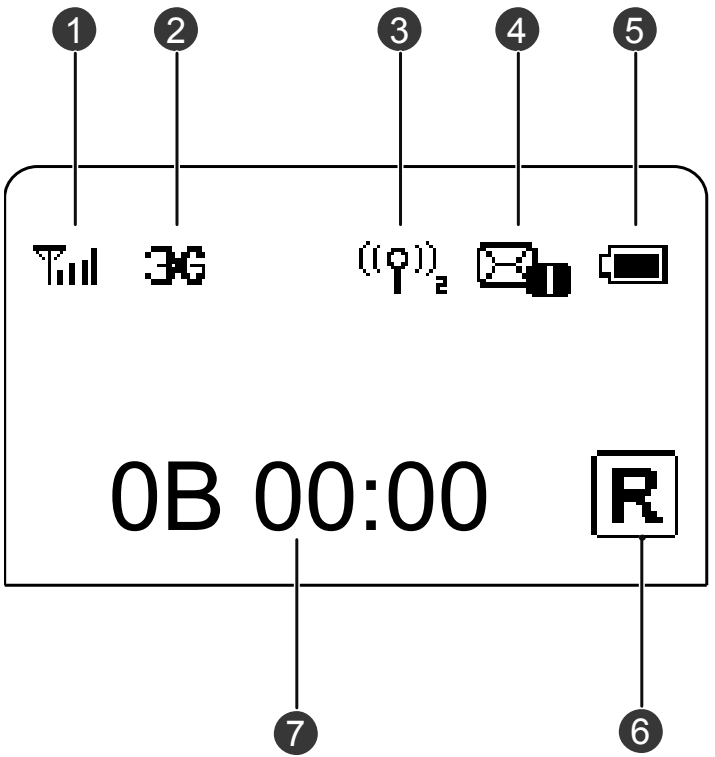

Note:

- Wi-Fi: Wireless fidelity
- Traffic statistics are for your reference only. To obtain the actual traffic data, contact your service provider.

Before You Start

Installing the SIM Card and the Battery

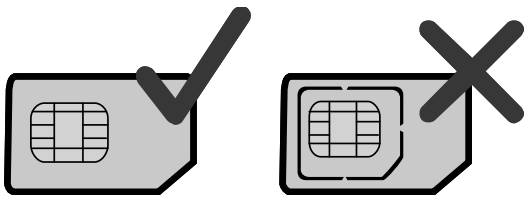

Caution: Do not use any SIM card that is not standard or is incompatible with the Mobile WiFi. Otherwise, the Mobile WiFi may be damaged.

Insert the SIM card in the card slot. Be sure that the SIM card is facing in the right direction, as shown in figure 2, and then slide the SIM card into the slot.

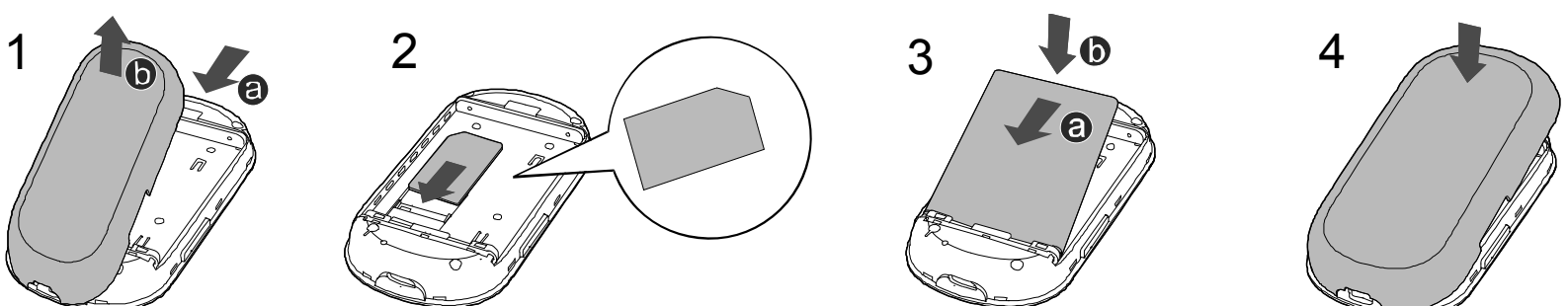

Installing the microSD Card

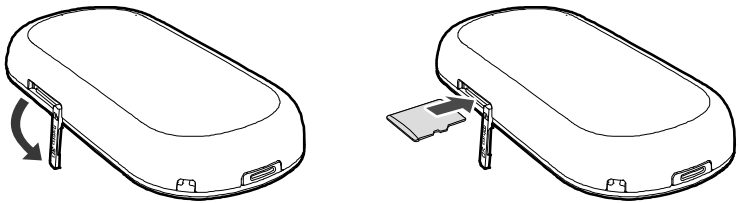

1. Remove the rubber cap from the microSD card slot. Then insert the microSD card into the slot.
2. After inserting the microSD card completely, attach the rubber cap.

Note:

- The microSD card is an optional accessory. If a microSD card did not come with your Mobile WiFi, you may purchase one yourself.
- To remove the microSD card, press in the card gently. The microSD card will pop out for removal.
- Do not remove the microSD card when it is in use. Doing so may damage the card and the Mobile WiFi, and data stored on the card may be lost.

Charging the Battery

Note: If the battery has not been used for a long time, it must be charged first.

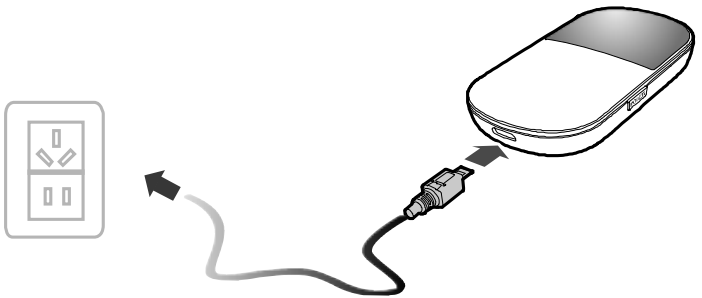

Method 1: Using the charger

Caution: Only use chargers compatible with the Mobile WiFi and provided by a designated manufacturer. Use of an incompatible charger or one from an unknown manufacturer may cause the Mobile WiFi to malfunction, fail, or could even cause a fire. Such use voids all warranties, whether expressed or implied, on the product.

Method 2: Connecting to a PC for charging

Connect the Mobile WiFi to a PC using a compatible data cable.

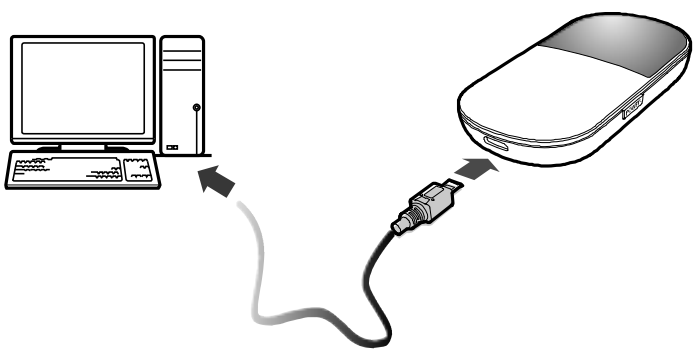

Accessing the Internet via Wi-Fi Connection

Note: By default, management parameters are preset on the Mobile WiFi according to the requirements of the service provider. Follow the steps below to quickly access the Internet. For the details about how to set management parameters, see help on the web management page.

Step1: Power on the Mobile WiFi

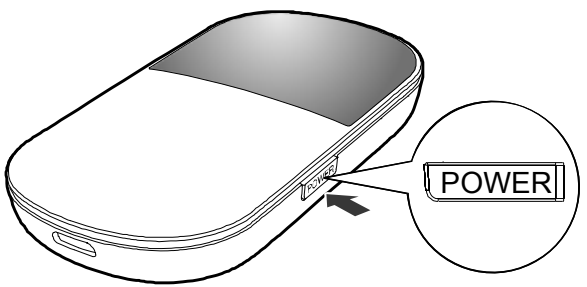

Press and hold POWER until the screen lights up. The Mobile WiFi is powered on.
Note: Press and hold POWER to power off the Mobile WiFi.

Step2: Establish a Wi-Fi Connection (Take a computer with Windows® XP operating system as an example)

1. Make sure that the Wi-Fi is enabled.

2. Select Start > Control Panel > Network Connections > Wireless Network Connection.

Note: To set up a Wi-Fi connection, the PC must have a wireless network adapter installed. If Wireless Network Connection is displayed, a wireless network adapter is available. Otherwise, check to make sure you have a wireless network adapter installed.

3. Click View available wireless networks to display a list of wireless networks available.
4. Select a network that has the same SSID as that of the Mobile WiFi, and then click Connect.

Note:

- If the encryption parameter is already set for the Mobile WiFi, the Wireless Network Connection dialog box is displayed. Enter the network key in the dialog box.
- The SSID and network key label are affixed to your Mobile WiFi.

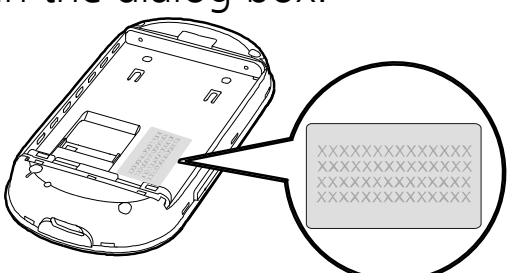

5. Wait until the wireless connection icon is displayed in the status area in the lower right corner of the PC screen.

Step3: Access the Internet

After you establish a Wi-Fi connection successfully, you can access the Internet using the following modes.

Caution: Please select a proper Internet connection mode based on your service expense. For example, if you are subscribed to the time-based network service, you are recommended to select Manual mode. For details about the service expense, consult your service provider.

Mode	Operations
Auto	After the Mobile WiFi is powered on, it will connect to the Internet automatically if data transmission is required. If there is no data transmission over a period of time, the Mobile WiFi automatically terminates the Internet connection.
Manual	Launch the web management page and follow the prompts to connect to or disconnect from the network.

Note: Launch the web management page to select the mode for accessing the Internet.

Accessing the Web Management Page

1. Make sure that the connection between the Mobile WiFi and the client is a proper one.
2. Start the Internet browser and enter http://192.168.1.1 in the address bar.
3. Enter the password and log in to the web management page.

Note: The default password is admin.

Daily Use

Power Saving Mode

If no operation is performed on the Mobile WiFi within a preset period, the screen turns off. Press any key to light up the screen.
If the Mobile WiFi is powered by only the battery and if no data is transmitted within a preset period (10 minutes by default), the Wi-Fi is disabled automatically. Press any key to enable the Wi-Fi again.

Validating the PIN Code

If PIN code protection is enabled, log in to the web management page and follow the prompts to enter the correct PIN code. Both PIN and PUK are delivered with the SIM card. For details, consult your service provider.

Restoring Factory Defaults

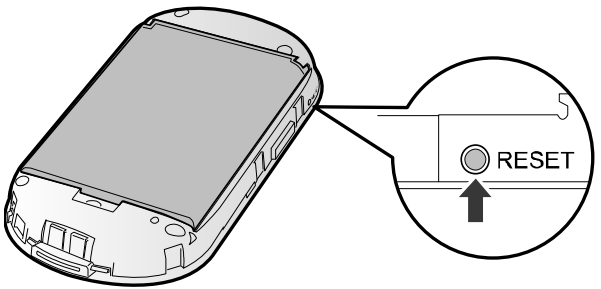

If you forget the changes you have made to some parameters, you may restore factory defaults and reconfigure the Mobile WiFi. To restore the factory defaults, press and hold the RESET button until the screen turns off. All factory default settings are successfully restored.

Note: Restoring factory defaults deletes all personal configuration settings and restores all web-based management settings and parameters to their default values.

Example 1: Wi-Fi Connection to Game Machine (Sony PSP)

1. Turn on the PSP WLAN switch.
2. Select Settings > Network Settings.
3. Select Infrastructure Mode to connect to your local Wi-Fi access point.
4. Select New Connection to specify an easy to remember connection name.
5. Select Scan to detect all networks within range. The access point list is displayed.
6. Select the SSID in the same way as you did for the Mobile WiFi. First press the ► button of your game machine to confirm the SSID and then press it again to input the Wi-Fi key.

- SSID: The Wi-Fi name of the Mobile WiFi.

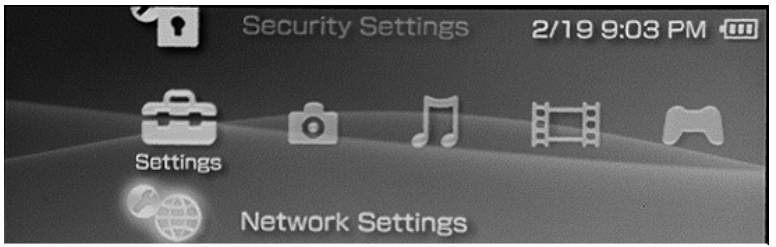

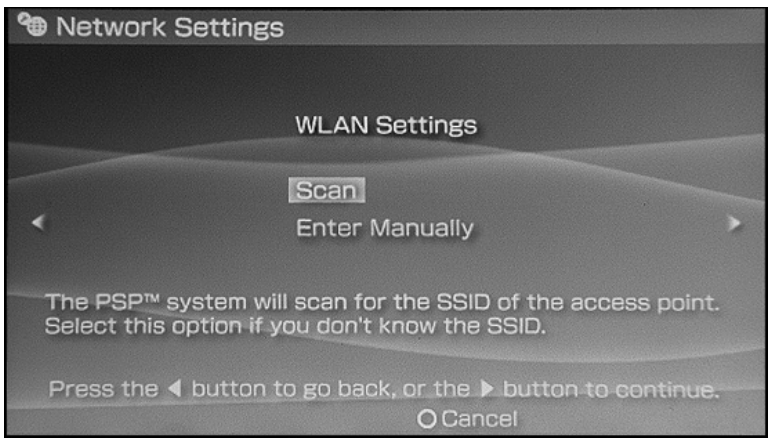

- WEP: The Wi-Fi key of the Mobile WiFi.
- The default SSID and key label are affixed to the Mobile WiFi.

7. Press the ► button of your game machine to continue, and then press the X button to save the settings.
8. Select Test Connection to check the connection.
9. Go to Internet Browser.

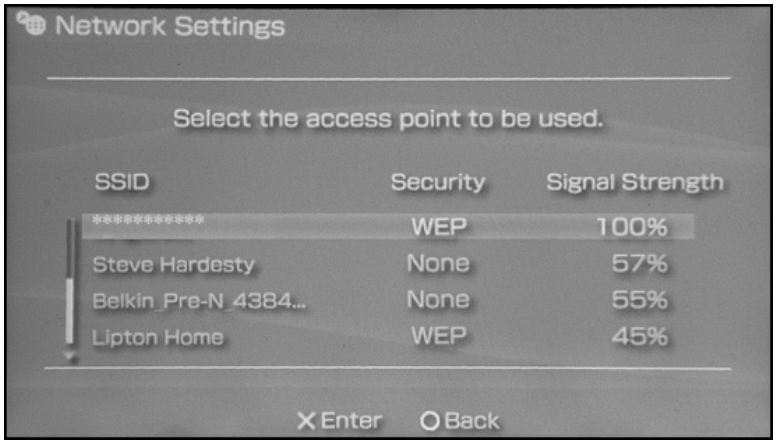

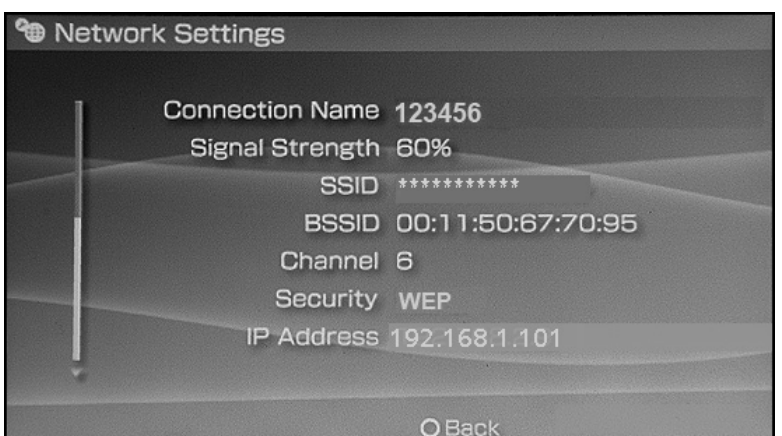

Example 2: Wi-Fi Connection to a Smart Phone (iPhone)

1. Select Settings > Wi-Fi, and then turn on Wi-Fi.
2. Automatically detect the networks in range and display the access point list.
3. Select a network that the Mobile WiFi is using.
4. If necessary, enter a password and tap Join. (Networks requiring a password appear with a lock icon.)

Note: Some Wi-Fi clients such as iTouch, PS3 and NDS can also access the Internet via the Mobile WiFi. For details, see the user guides of the Wi-Fi clients.

Tips

If the Mobile WiFi is placed in an environment with poor ventilation, it may overheat after extended use. When the Mobile WiFi overheats, it will switch off and disconnect from the network automatically to protect itself. If this happens, place the Mobile WiFi in a well-ventilated location, then restart the Mobile WiFi.

If you are experiencing difficulties using the Mobile WiFi, try the following:

- See help on the web management page.
- Restart the Mobile WiFi.
- Restore the factory defaults.
- Contact your service provider.