Copyright © Huawei Technologies Co., Ltd. 2012.

All rights reserved.

No part of this document may be reproduced or transmitted in any form or by any means without prior written consent of Huawei Technologies Co., Ltd.

The product described in this manual may include copyrighted software of Huawei Technologies Co., Ltd and possible licensors. Customers shall not in any manner reproduce, distribute, modify, decompile, disassemble, decrypt, extract, reverse engineer, lease, assign, or sublicense the said software, unless such restrictions are prohibited by applicable laws or such actions are approved by respective copyright holders under licenses.

Trademarks and Permissions

HUAWEI, HUAWEI, and are trademarks or registered trademarks of Huawei Technologies Co., Ltd.

Other trademarks, product, service and company names mentioned are the property of their respective owners.

Notice

Some features of the product and its accessories described herein rely on the software installed, capacities and settings of local network, and may not be activated or may be limited by local network operators or network service providers, thus the descriptions herein may not exactly match the product or its accessories you purchase.

Huawei Technologies Co., Ltd reserves the right to change or modify any information or specifications contained in this manual without prior notice or obligation.

NO WARRANTY

THE CONTENTS OF THIS MANUAL ARE PROVIDED “AS IS”. EXCEPT AS REQUIRED BY

APPLICABLE LAWS, NO WARRANTIES OF ANY KIND, EITHER EXPRESS OR IMPLIED, INCLUDING BUT NOT LIMITED TO, THE IMPLIED WARRANTIES OF MERCHANTABILITY AND FITNESS FOR A PARTICULAR PURPOSE, ARE MADE IN RELATION TO THE ACCURACY, RELIABILITY OR CONTENTS OF THIS MANUAL.

TO THE MAXIMUM EXTENT PERMITTED BY APPLICABLE LAW, IN NO CASE SHALL HUAWEI TECHNOLOGIES CO., LTD BE LIABLE FOR ANY SPECIAL, INCIDENTAL, INDIRECT, OR CONSEQUENTIAL DAMAGES, OR LOST PROFITS, BUSINESS, REVENUE, DATA, GOODWILL OR ANTICIPATED SAVINGS.

Import and Export Regulations

Customers shall comply with all applicable export or import laws and regulations and will obtain all necessary governmental permits and licenses in order to export, re-export or import the product mentioned in this manual including the software and technical data therein.

Contents

Getting to Know the MU733 1
Installation Guide 2
Safety Information 4

Thank you for purchasing HUAWEI MU733 HSPA+ B2B Module (hereinafter referred to as the MU733)

Note:

- This manual briefly describes the preparation, the process for PCB Design, assembly and safety precautions.
- It is recommended to read the manual before using the MU733.

Getting to Know the MU733

- The MU733 module uses a 50-pin B2B as its external interface with a dimension of 40 mm × 20 mm × 2.0 mm. The MU733 module is connected to the B2B component. The signals output from the module are transferred to the development board for secondary development. The dimensions and appearance of MU733 in details are shown as following image.

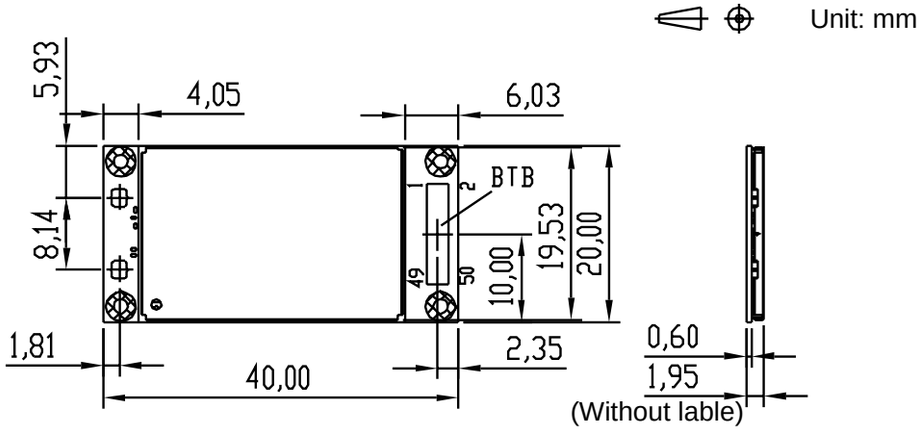

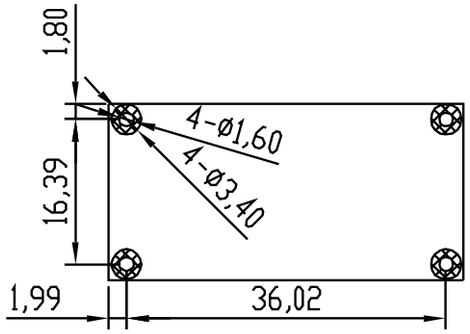

Note:

- In certain cases, your development board may be disassembled only by the professionals.
- Before you install the MU733 onto the development board, consult the development board manufacturer or read the user manual of the development board.

Installation Guide

- There are two methods to connect MU733 module and development board: by the FPC and the B2B connector.

1. Connect MU733 and development board by FPC.

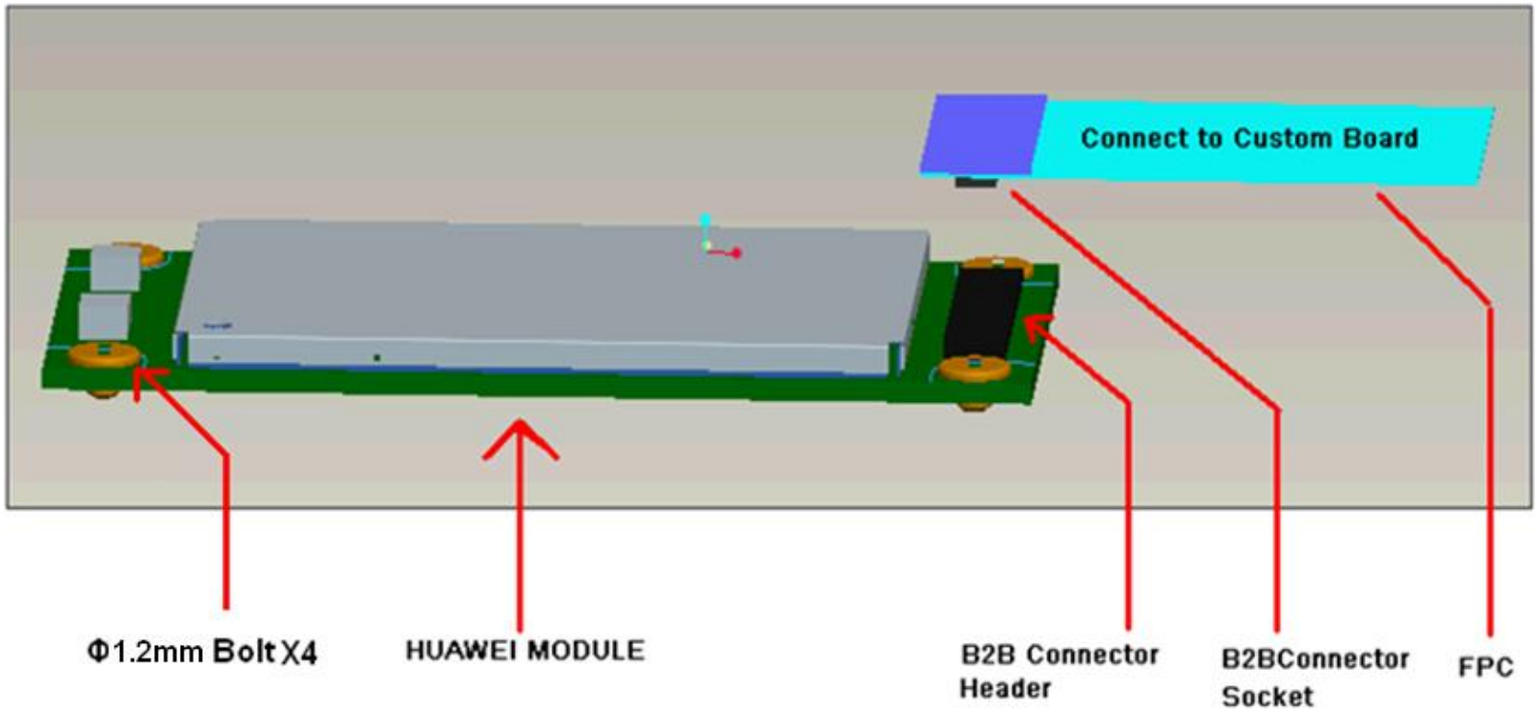
Connect to Custom Board
Φ1.2mm Bolt X4
HUAWEI MODULE
B2B Connector Header
B2BConnector Socket
FPC

2. Connect MU733 and development board by B2B connector.

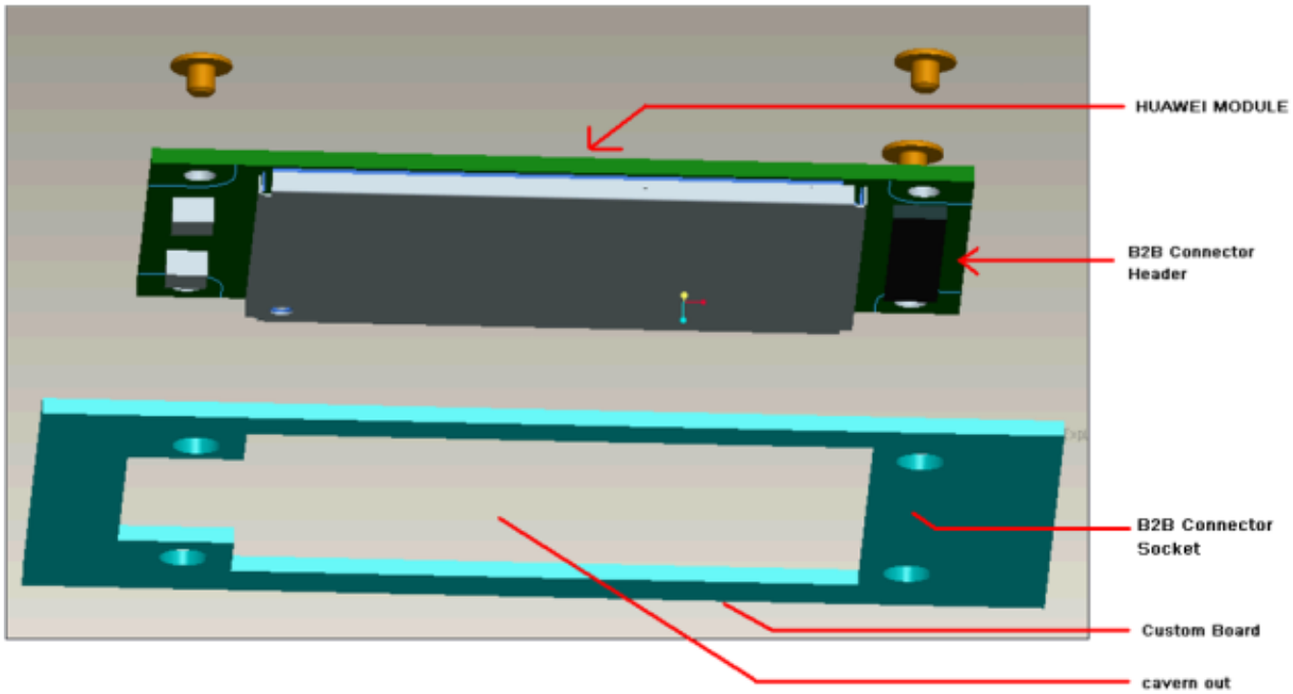

Note:

- It is recommended to use Φ1.2mm bolt to fasten the MU733 and development board.
- It will become very hot on the surface of MU733 when it is operating in the maximum transmitting power. Therefore, it is recommended not to touch MU733 during that time.

Safety Information

Read the safety information carefully to ensure the correct and safe use of your wireless device.

Interference

Do not use your wireless device if using the device is prohibited or when it causes danger or

interference with electric devices.

Medical Device

- Do not use your wireless device and follow the rules and regulations set forth by the hospitals and health care facilities.
- Some wireless devices may affect the performance of the hearing aids. For any such problems, consult your service provider.
- If you are using an electronic medical device, consult the doctor or device manufacturer to confirm whether the radio wave affects the operation of this device.

Area with Inflammables and Explosives

To prevent explosions and fires in areas that are stored with inflammable and explosive devices, do not use your wireless device and observe the rules. Areas stored with inflammables and explosives include but are not limited to the following:

- Gas station
- Fuel depot (such as the bunk below the deck of a ship)
- Container/Vehicle for storing or transporting fuels or chemical products
- Area where the air contains chemical substances and particles (such as granule, dust, or metal powder)
- Area indicated with the "Explosives" sign
- Area indicated with the "Power off bi-direction wireless equipment" sign
- Area where you are generally suggested to stop the engine of a vehicle

Traffic Security

- Observe local laws and regulations while using the wireless device. To prevent accidents, do not use your wireless device while driving.
- RF signals may affect electronic systems of motor vehicles. For more information, consult the vehicle manufacturer.
- In a motor vehicle, do not place the wireless device over the air bag or in the air bag deployment area. Otherwise, the wireless device may hurt you owing to the strong force when the air bag inflates.
- Observe the rules and regulations of airline companies. When boarding, switch you're your wireless device. Otherwise, the radio signal of the wireless device may interfere with the plane control signals.

Safety of Children

Do not allow children to use the wireless device without guidance. Small and sharp components of the wireless device may cause danger to children or cause suffocation if children swallow the components.

Environment Protection

Observe the local regulations regarding the disposal of your packaging materials, used wireless device and accessories, and promote their recycling.

WEEE Approval

The wireless device is in compliance with the essential requirements and other relevant provisions of the Waste Electrical and Electronic Equipment Directive 2002/96/EC (WEEE Directive).

RoHS Approval

The wireless device is in compliance with the restriction of the use of certain hazardous substances in electrical and electronic equipment Directive 2002/95/EC (RoHS Directive).

Laws and Regulations Observance

Observe laws and regulations when using your wireless device. Respect the privacy and legal rights of the others.

Care and Maintenance

It is normal that your wireless device gets hot when you use or charge it. Before you clean or maintain the wireless device, stop all applications and power off the wireless device.

- Use your wireless device and accessories with care and in clean environment. Keep the wireless device from a fire or a lit cigarette.
- Protect your wireless device and accessories from water and vapor and keep them dry.
- Do not drop, throw or bend your wireless device.
- Clean your wireless device with a piece of damp and soft antistatic cloth. Do not use any chemical agents (such as alcohol and benzene), chemical detergent, or powder to clean it.
- Do not leave your wireless device and accessories in a place with a considerably low or high temperature.
- Use only accessories of the wireless device approved by the manufacture. Contact the authorized service center for any abnormity of the wireless device or accessories.
- Do not dismantle the wireless device or accessories. Otherwise, the wireless device and accessories are not covered by the warranty.

Emergency Call

This wireless device functions through receiving and transmitting radio signals. Therefore, the connection cannot be guaranteed in all conditions. In an emergency, you should not rely solely on the wireless device for essential communications.

Regulatory Information

The following approvals and notices apply in specific regions as noted.

CE Approval (European Union)

The wireless device is approved to be used in the member states of the EU. The wireless device is in compliance with the essential requirements and other relevant provisions of the Radio and Telecommunications Terminal Equipment Directive 1999/5/EC (R&TTE Directive).

Federal Communications Commission Notice (United States): Before a wireless device model is available for sale to the public, it must be tested and certified to the FCC that it does not exceed the limit established by the government-adopted requirement for safe exposure.

This transmitter must not be co-located or operating in conjunction with any other antenna or transmitter.

FCC Radiation Exposure Statement:

This equipment complies with FCC radiation exposure limits set forth for an uncontrolled environment. End users must follow the specific operating instructions for satisfying RF exposure compliance.

- Note 1: This module has been certified to comply with RF exposure requirements under mobile or fixed condition, this module is to be installed only in mobile or fixed applications. The system antenna(s) used for this module must not exceed 2.59dBi (850MHz) and 2.60dBi (1900MHz)and 3.35dBi (1700M)for mobile and fixed or mobile operating configurations. The antenna must be installed such that 20 cm is maintained

between the antenna(s) and the body of the user or nearby persons.

FCC Statement

This device complies with Part 15 of the FCC Rules. Operation is subject to the following two conditions: (1) this device may not cause harmful interference, and (2) this device must accept any interference received, including interference that may cause undesired operation.

* This device should be installed and operated with a minimum distance of 20 cm between the radiator and your body.

Warning: Changes or modifications made to this equipment not expressly approved by HUAWEI may void the FCC authorization to operate this equipment.

CE0682