FCC
RF Test Report

Product Name: HSPA+ Module

Model Number: MU733

Report No: SYBH(Z-RF)009022012-2001
FCC ID: QISMU733

Reliability Laboratory of Huawei Technologies Co., Ltd.

Huawei Base, Bantian, Longgang District, Shenzhen 518129, P.R. China

Tel: +86 755 28780808 Fax: +86 755 89652518

Notice

1. The laboratory has obtained the accreditation of China National Accreditation Service for Conformity Assessment (CNAS), and accreditation number: L0310.
2. The laboratory has been listed on the US Federal Communications Commission list of test facilities recognized to perform electromagnetic emissions measurements. The site recognition number is 97456.
3. The laboratory has been listed by industry Canada to perform electromagnetic emission measurement. The site recognition number is 6369A-2.
4. The test report is invalid if not marked with "exclusive stamp for the test report".
5. The test report is invalid if not marked with the stamps or the signatures of the persons responsible for performing, revising and approving the test report.
6. The test report is invalid if there is any evidence of erasure and/or falsification.
7. If there is any dissidence for the test report, please file objection to the test centre within 15 days from the date of receiving the test report.
8. Normally, the test report is only responsible for the samples that have undergone the test.
9. Context of the test report cannot be used partially or in full for publicity and/or promotional purposes without previous written approval of the laboratory.

Applicant:	Huawei Technologies Co., Ltd.
Address:	Huawei Base, Bantian, Longgang District, Shenzhen 518129, P.R. China
Date of Receipt Test Item:	Feb.06, 2012
Start Date of Test:	Feb.07, 2012
End Date of Test:	Feb.12, 2012

Test Result:	Pass

	Date	Name	Signature
Approved By Senior Engineer	Feb.13, 2012	Dai Linjun	Dai Linjun
Reviewed By	Feb.13, 2012	Cousy Xu	Cousy XU
Operator	Feb.13, 2012	Huang Qiuliang	Huang Qiuliang

Confidential Information of Huawei.
No Distribution without Written Permission

Contents

1 General Information 5
1.1 APPLIED STANDARD 5
1.2 TEST LOCATION 5
1.3 TEST ENVIRONMENT CONDITION 5
2 Summary 6
3 Product Description 7
3.1 PRODUCTION INFORMATION 7
4 Test Description 8
4.1 SUPPORTED FREQUENCY RANGE 8
4.2 TRANSMITTER / RECEIVER CHARACTERISTICS 8
4.3 ANTENNA GAIN 8
4.4 POWER SUPPLY 8
5 General Test Conditions / Configurations 9
5.1 RF CHANNELS UNDER TEST 9
5.2 TEST MODES 9
5.3 TEST ENVIRONMENTS 9
5.4 TEST SETUPS 10
5.5 TEST CONDITIONS 12
6 Main Test Instruments 14
7 Test Results 15
8 Measurement Uncertainty 15

1 General Information

1.1 Applied Standard

Applied Rules:	47 CFR FCC Part 2:2010, Subpart J 47 CFR FCC Part 22:2010, Subpart H ANSI/TIA 603C:2004

1.2 Test Location

Test Location 1:	Reliability Laboratory of Huawei Technologies Co., Ltd.
Address:	Huawei Base, Bantian, Longgang District, Shenzhen 518129, P.R. China

1.3 Test Environment Condition

Ambient Temperature:	20 – 25 °C
Ambient Relative Humidity:	45 – 55 %
Atmospheric Pressure:	101 kPa

2 Summary

Table 1 Summary of results

Test Case	FCC Part No.	Requirements	Result
Cellular Band			
Transmitter Output Power	2.1046 & 22.913	ERP not exceed 7 W Peak-to-average ratio not exceed 13 dB	Pass
Modulation Characteristics	2.1047	Digital modulation	Pass
Occupied Bandwidth	2.1049	(Not specified)	Pass
Band Edges Compliance	2.1051 & 917	Below -13 dBm/1%*EBW, in 1 MHz range	Pass
Spurious Emission at Antenna Terminals	2.1051 & 2.917	Below -13 dBm/1 kHz, 9 kHz to 150 kHz Below -13 dBm/10 kHz, 150 kHz to 30 MHz Below -13 dBm/100 kHz, 30 MHz to 10th harmonics	Pass
Field Strength of Spurious Radiation	2.1053 & 22.917	Below -13 dBm/100 kHz	Pass
Frequency Stability	2.1055 & 22.355	Maintained within the tolerances of ±2.5ppm	Pass

Confidential Information of Huawei.
No Distribution without Written Permission

3 Product Description

3.1 Production Information

3.1.1 General Description

MU733 HSPA+/WCDMA/GSM/GPRS/EDGE dual mode Wireless Module is subscriber equipment in the UMTS/GSM system. MU733 implement such functions as RF signal receiving/transmitting, HSPA+/WCDMA and EDGE/GPRS/GSM protocol processing, data service etc. Externally it provides B2B interface.

1.3.1 Board Information

Table 2 Board Information

HSPA+ Module		
MU733		
Board and Module		
Serial Number	Software Version	Hardware Version
06F01A1210400001	11.102.13.00.00	MD1MU733M

4 Test Description

4.1 Supported Frequency Range

Characteristics	Description
Downlink	869 to 894 MHz;
Uplink	824 to 849 MHz

4.2 Transmitter / Receiver Characteristics

Characteristics	Description
System Type	GSM UMTS
TX Output Power (per Antenna Port)	GSM system: 33dBm; UMTS system: 24dBm;
Channel Spacing(s) / Bandwidth(s)	GSM system: 200 kHz UMTS system: 5 MHz
Designation of Emissions	GSM system: 246KGXW (GMSK modulation), 242KG7W (8PSK modulation) UMTS system: 4M08F9W

4.3 Antenna Gain

Antenna Gain(dBi)	2.59
Antenna Gain(dBd)	0.44

4.4 Power Supply

Specification	Description
Power Supply Type	Directly Connected to DC /AC Power Supply
Input to EUT (DC power)	DC Voltage Nominal: ⎓ 3.8 V DC Voltage Range: ⎓ 3.3 V to 4.2 V
Input to EUT (AC power)	AC Voltage Nominal: ~ 230 V (50/60 Hz) AC Voltage Range: ~100-240V

5 General Test Conditions / Configurations

5.1 RF Channels under Test

Test Mode	TX / RX	RF Channel		
		Bottom (B)	Middle (M)	Top (T)
TM1/TM2	TX	Channel 128	Channel 192	Channel 251
		824.2MHz	837.0MHz	848.8MHz
	RX	Channel 128	Channel 192	Channel 251
		869.2MHz	882.0MHz	893.8MHz
TM3/TM4/TM5	TX	Channel 4132	Channel 4182	Channel 4233
		826.4MHz	836.4MHz	846.6MHz
	RX	Channel 4357	Channel 4407	Channel 4458
		871.4MHz	881.4MHz	891.6MHz

5.2 Test Modes

Test Mode	Test Modes Description
TM1	GSM/GPRS, GMSK modulation
TM2	EDGE, 8PSK modulation
TM3	WCDMA ,QPSK modulation
TM4	HSDPA , QPSK modulation
TM5	HSUPA , QPSK modulation

5.3 Test Environments

Environment Parameter	Selected Values During Tests	
Relative Humidity	Ambient	
Temperature	TN	Ambient
Voltage	VL	3.3V
	VN	3.8V
	VH	4.2V

NOTE: VL= lower extreme test voltages
VN= nominal voltage
VH= upper extreme test voltage
TN= normal temperature

5.4 Test Setups

5.4.1 General Test Setup Configurations

Configuration	Description
Test Antenna Ports	Until otherwise declared, all TX tests are ONLY performed at the main Transmitter antenna port (e.g. TRXA, TXA and so on) of the EUT, and all RX tests are ONLY performed at the main Receiver antenna port (e.g. TRXA, RXA and so on) of the EUT.
Multiple RF Sources	Other than the tested RF source of the EUT, other RF source(s) are disabled or shutdown during measurements.

5.4.2 Test Setup 1

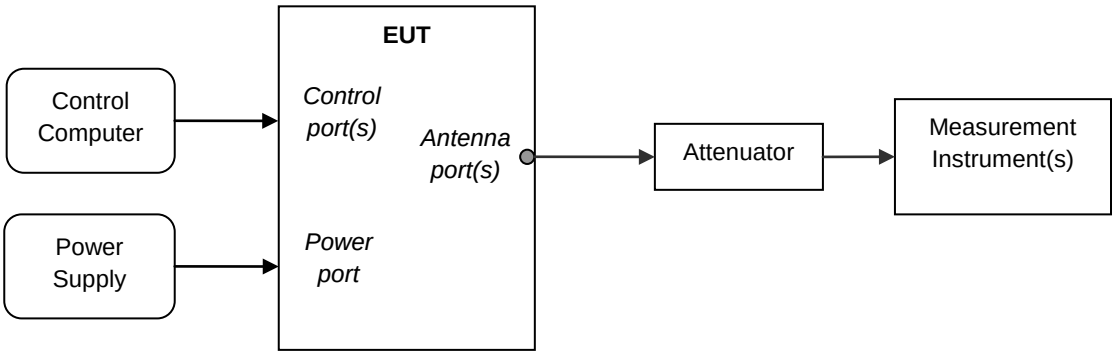

5.4.3 Test Setup 2

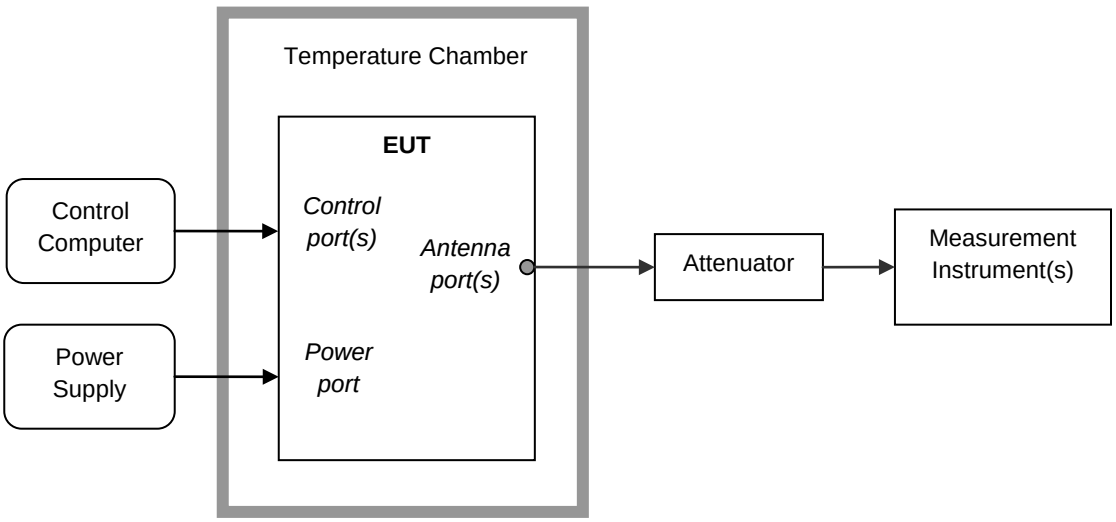

5.4.4 Test Setup 3

NOTE: Effective radiated power (ERP) refers to the radiation power output of the EUT, assuming all emissions are radiated from half-wave dipole antennas.

Step 1: Pre-test

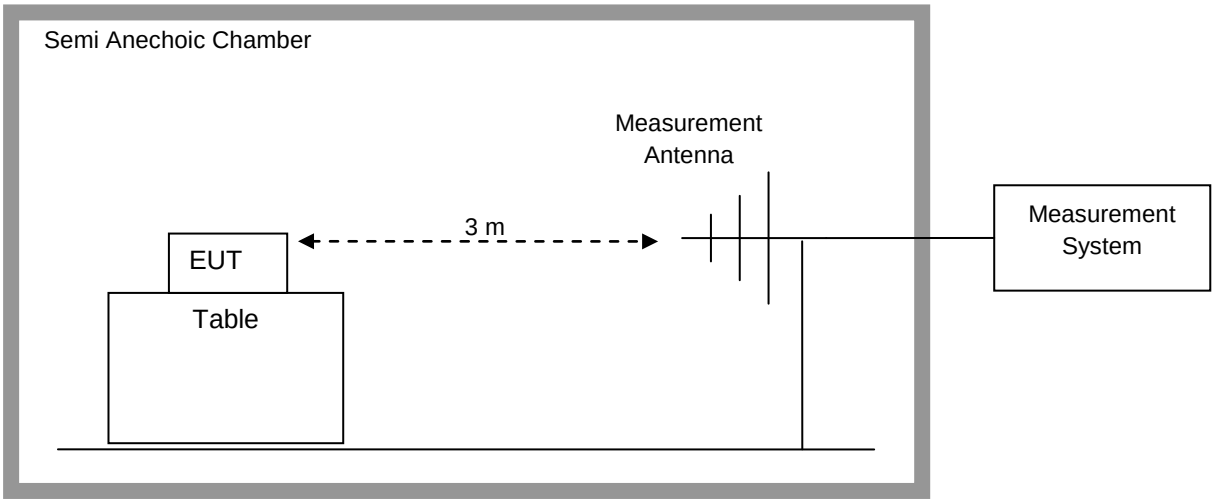

Step 2: Substitution method to verify the maximum ERP

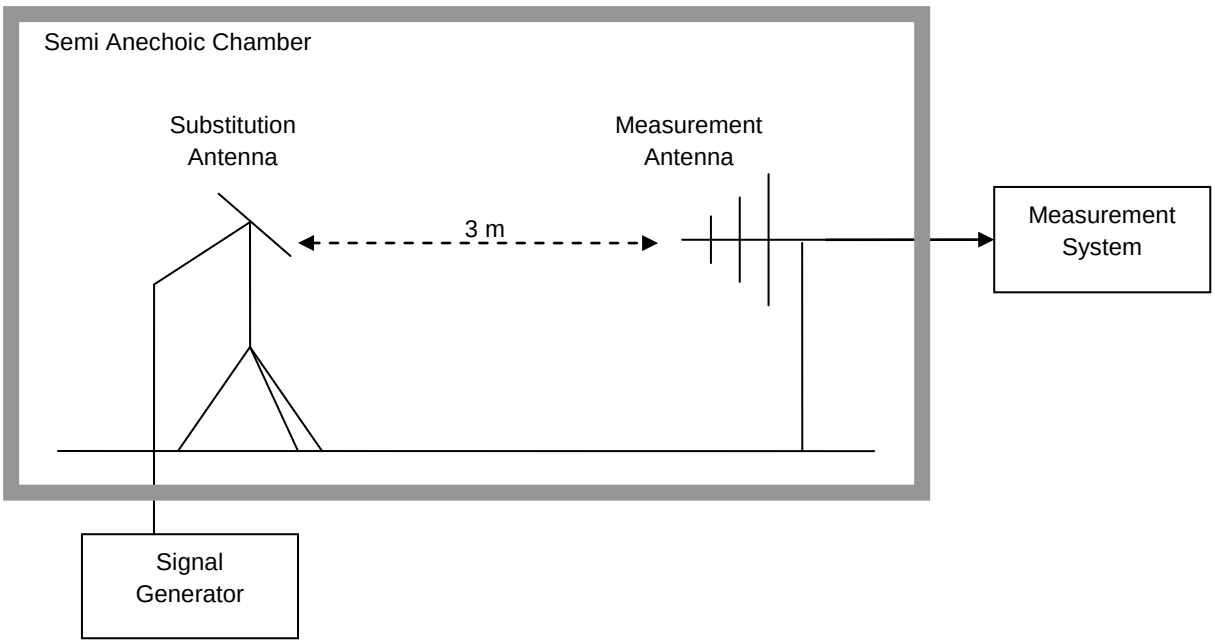

5.5 Test Conditions

Test Case	Test Conditions	
Transmitter Output Power	Test Configuration	Ambient Temperature & Rated Voltage
	Test Setup	Test Setup 1 & Test Setup 3
	Detector	RMS
	RF Channels (TX)	B, M, T
	Test Mode	TM1/TM2/TM3/TM4/TM5
Modulation Characteristics	Test Configuration	Ambient Temperature & Rated Voltage
	Test Setup	Test Setup 1
	RF Channels (TX)	M
	Test Mode	TM1/TM2/TM3
Occupied Bandwidth	Test Configuration	Ambient Temperature & Rated Voltage
	Test Setup	Test Setup 1
	Detector	PK
	RF Channels (TX)	B, M, T
	Test Mode	TM1/TM2/TM3
Band Edges Compliance	Test Configuration	Ambient Temperature & Rated Voltage
	Test Setup	Test Setup 1
	Detector	RMS
	RF Channels (TX)	B, T
	Test Mode	TM1/TM2/TM3
Spurious Emission at Antenna Terminals	Test Configuration	Ambient Temperature & Rated Voltage
	Test Setup	Test Setup 1
	Detector	PK
	RF Channels (TX)	B, M,T
	Test Mode	TM1/TM2/TM3
Field Strength of Spurious Radiation	Test Configuration	Ambient Temperature & Rated Voltage
	Test Setup	Test Setup 3
	Detector	PK
	RF Channels (TX)	M
	Test Mode	TM1/TM2/TM3/TM4/TM5
Frequency Stability	Test Configuration	(1) -30 °C to +50 °C with step 10 °C at Rated Voltage; (2) 85%, 100% and 115% of Rated Voltage at Ambient Temperature.
	Test Setup	Test Setup 2

Test Case	Test Conditions	
	RF Channels (TX)	M
	Test Mode	TM1/TM2/TM3

6 Main Test Instruments

Table 3 Main Test Equipments

Equipment Description	Manufacturer	Model	Serial Number	Calibrated until
Power supply	KEITHLEY	2303	1288003	Sep.27,2012
Universal Radio Communication Tester	R&S	CMU200	117341	Jan.12.2013
Universal Radio Communication Tester	Agilent	E5515C	MY50260239	Aug.31,2012
Spectrum Analyzer	Agilent	E4440A	MY49420179	Apr.20,2012
Signal Analyzer	R&S	FSQ31	200021	Sep.27,2012
Temperature Chamber	WEISS	WKL64	24600294	Jan.03,2013
Signal generator	Agilent	E8257D	MY49281095	Jul.09.2012
Test receiver	R&S	ESU26	100150	May.29.2012
Tunable Dipole	Schwarzbeck	D69250-UHAP/D69250-VHAP	919/1009	Jan.29.2013
Tunable Dipole	Schwarzbeck	D69250-UHAP/D69250-VHAP	979/917	Jan.29.2013
Horn Antenna	R & S	HF906	100683	May.15, 2012
Horn Antenna	R & S	HF906	100684	Jul.01, 2012
Broadband Antenna	Schwarzbeck	VULB 9163	9163-357	May.15, 2012
Broadband Antenna	Schwarzbeck	VULB 9163	9163-356	May.15, 2012

Confidential Information of Huawei.
No Distribution without Written Permission

Table 4

7 Test Results

No.	Test Item	Test Result
1	Transmitter Output Power	Appendix A
2	Modulation Characteristics	Appendix B
3	Occupied Bandwidth	Appendix C
4	Band Edges Compliance	Appendix D
5	Spurious Emission at Antenna Terminals	Appendix E
6	Field Strength of Spurious Radiation	Appendix F
7	Frequency Stability	Appendix G
8	Photos of Field Strength of Spurious Radiation	Appendix H

NOTE: The Appendix H only photos of Field Strength of Spurious Radiation, no test data.

8 Measurement Uncertainty

For a 95% confidence level (k=2), the measurement expanded uncertainties for defined systems, in accordance with the recommendations of ISO 17025 as following:

Test Item		Extended Uncertainty
Transmitter Output Power	Power (dBm)	U =0.39 dB
Occupied Bandwidth	Magnitude (%)	U=0.2%
Band Edge Compliance	Disturbance Power (dBm)	U=2.0 dB
Conducted Spurious Emissions	Disturbance Power (dBm)	U=2.0 dB
Field Strength of Spurious Radiation	ERP (dBm)	U=4.6 dB (30 MHz – 1GHz) U=3.0 dB (above 1 GHz)
Frequency Stability	Frequency Accuracy (ppm)	U=0.21 ppm

----------The END----------