FCC Test Report

Product Name: cdma2000 Digital Mobile Phone

Model Number: HUAWEI M835/M835/HUAWEI C8500-3/C8500-3

Report No: SYBH(Z-RF)003012011-2002
FCC ID: QISM835

Reliability Laboratory of Huawei Technologies Co., Ltd.

Huawei Base, Bantian, Longgang District, Shenzhen 518129, P.R. China

Tel: +86 755 28780808 Fax: +86 755 89652518

Notice 1
1. The laboratory has obtained the accreditation of China National Accreditation Service for Conformity Assessment (CNAS), and accreditation number: L0310.
2. The laboratory has obtained the accreditation of THE AMERICAN ASSOCIATION FOR LABORATORY ACCREDITATION (A2LA), and Accreditation Council Certificate Number: 2174.01.
3. The laboratory has been listed on the US Federal Communications Commission list of test facilities recognized to perform electromagnetic emissions measurements. The site recognition number is 97456.
4. The laboratory has been listed by industry Canada to perform electromagnetic emission measurement. The site recognition number is 6369A-1.
5. The laboratory also has been listed by the VCCI to perform EMC measurements. The accreditation number is R2364, C2583, and T256.
6. The test report is invalid if not marked with "exclusive stamp for the test report".
7. The test report is invalid if not marked with the stamps or the signatures of the persons responsible for performing, revising and approving the test report.
8. The test report is invalid if there is any evidence of erasure and/or falsification.
9. If there is any dissidence for the test report, please file objection to the test centre within 15 days from the date of receiving the test report.

REPORT ON	**FCC Test of cdma2000 Digital Mobile Phone**
	M/N: HUAWEI M835/M835/HUAWEI C8500-3/C8500-3
	Report No: SYBH(Z-RF)003012011-2002
	FCC ID: QISM835
REGULATION	**FCC CFR47 Part 2: Subpart J;**
	FCC CFR47 Part 24: Subpart E;

CONCLUSION **PASS**

Approved By	**2011-01-24**	**Chen Xiaohong**	Chen Xiaohong
	Date	**Name**	**Signature**
Reviewed By	**2011-01-24**	**Xu Guangyi**	Xuguangyi
	Date	**Name**	**Signature**
Operator	**2011-01-24**	**Wuhua**	Wuhua
	Date	**Name**	**Signature**

Contents

1 Summary **5**

2 Product Description **6**

2.1 PRODUCTION INFORMATION 6
2.2 MODIFICATION INFORMATION 6

3 Test Site Description **7**

3.1 TESTING PERIOD 7
3.2 GENERAL SET UP DESCRIPTION 7

4 Product Description **8**

4.1 TECHNICAL CHARACTERISTICS 8
4.2 EUT IDENTIFICATION LIST 10

5 Main Test Instruments **11**

6 Transmitter Measurements **12**

6.1 EFFECTIVE ISOTROPIC RADIATED POWER OF TRANSMITTER (EIRP) 12
6.2 CONDUCTED OUTPUT POWER 16
6.3 MODULATION CHARACTERISTICS 18
6.4 OCCUPIED BANDWIDTH 20
6.5 BAND EDGES COMPLIANCE 23
6.6 SPURIOUS EMISSION AT ANTENNA TERMINAL 25
6.7 FREQUENCY STABILITY 28

7 System Measurement Uncertainty **33**

8 Appendixes **34**

1 Summary

The table below summarizes the measurements and results for the Cdma2000 Digital Mobile Phone HUAWEI M835/M835/HUAWEI C8500-3/C8500-3. Detailed results and descriptions are shown in the following pages.

Table 1 Summary of results

FCC Measurement Specification	FCC Limits Part(s)	Description	Result
2.1046	24.232	Effective Isotropically Radiated Power of Transmitter	PASS
2.1046	24.232	Conducted Power of Transmitter	PASS
2.1047		Modulation Characteristics	PASS
2.1049		Occupied Bandwidth	PASS
2.1051	24.238	Band Edges Compliance	PASS
2.1051	24.238	Spurious Emission at Antenna Terminals	PASS
2.1053	24.238	Radiated Spurious Emissions	PASS
2.1055	24.235	Frequency Stability	PASS

Note： The Radiated Spurious Emissions' test results are shown in the EMC report.

2 Product Description

2.1 Production Information

2.1.1 General Description

The cdma2000 Digital Mobile Phone - HUAWEI M835/M835/HUAWEI C8500-3/C8500-3 is subscriber equipment in the CDMA/EVDO system. The frequency band is US Cellular and N.American PCS and AWS，but only N.American PCS Band test data can be included in this report. The Mobile Phone implements such functions as RF signal receiving/transmitting, CDMA2000 1x and 1XEV-DO protocol processing, voice, video, MMS service, GPS, AGPS and WIFI etc. Externally it provides micro SD card interface and earphone port (to provide voice service). It also provides Bluetooth module to synchronize data between a PC and the phone, or to use the built-in modem of the phone to access the Internet with a PC, or to exchange data with other Bluetooth devices.

2.1.2 Support function and Service

The HUAWEI M835/M835/HUAWEI C8500-3/C8500-3 cdma2000 Digital Mobile Phone support the function and service as follows:

Table 2 Service and Test mode List

Service Name	Characteristic	Corresponding Test Mode	Note
voice and data	Modulation: QPSK	TM1*	
voice and data	Modulation: HPSK	TM3*	
Data(EV-DO)	Default Access Channel MAC	Subtype 0*	Modulation: HPSK
data(EV-DO)	Enhanced Access Channel MAC	Subtype 2*	The R-Data packet size determines the modulation format, R-Data Packet Size： 128, 256, 512, 768 or 1024 Modulation: BPSK R-Data Packet Size： 1536 ， 2048，3072，5596，6144 or 8192 Modulation: QPSK R-Data Packet Size：12288 Modulation: 8-PSK

Note: * Refer to ANSI/TIA-98-E section 1.3 for the information of TM (Test Mode) .

2.2 Modification Information

For original equipment, following table is not application.

Table 3 Modification Information

Model Number	Board/Module	Original Version	New Version	Modify Information

Not applicable!

3 Test Site Description

The test site of:

Huawei Technologies Co. Ltd.
P.O. Box 518129
Huawei base, bantian,
Longgang District, Shenzhen, China

3.1 Testing Period

The test have been performed during the period of

Jan. 18, 2011 — Jan. 20, 2011

3.2 General Set up Description

TM1: Forward Traffic Channel Radio Configuration 1, Reverse Traffic Channel Radio Configuration 1
TM3: Forward Traffic Channel Radio Configuration 3, Reverse Traffic Channel Radio Configuration 3

Parameter	Units	Value
$\hat{I}or$	dBm/1.23 MHz	-104
$\frac{Pilot\ Ec}{I_{or}}$	dB	-7
$\frac{Traffic\ Ec}{I_{or}}$	dB	-7.4

EVDO:

Current Physical Layer Subtype：

Subtype 0 * indicates that the protocol subtype assigned to the Access Channel MAC protocol is Default Access Channel MAC and its Subtype ID number is 0x0000.

Subtype 2 * indicates that the protocol subtype assigned to the Access Channel MAC protocol is Enhanced Access Channel MAC and its Subtype ID number is 0x0002

Note: *The test settings are defined in 3GPP2C.S0033.

4 Product Description

4.1 Technical Characteristics

4.1.1 Frequency Range

Table 4 Frequency Range

Uplink band:	1850 to 1910 MHz
Downlink band:	1930 to 1990 MHz

4.1.2 Channel Spacing / Separation

Table 5 Channel Spacing / Separation

Channel spacing:	50 kHz
Channel raster:	1.25 MHz

4.1.3 Type of Emission

Table 6 Type of Emission

Emission Designation:	1M25F9W

According to CFR 47 (FCC) part 2, subpart C, section 2.201 and 2.202

4.1.4 Environmental Requirements

Table 7 Environmental Requirements

Minimum temperature:	- 10 °C
Maximum temperature:	+ 55 °C
Relative Humidity:	5％-95％RH

4.1.5 Power Source

Table 8 Power Source

AC voltage nominal:	~ 120 V
AC voltage range	~ 100 V to ~ 240 V
AC current maximal:	1A

4.1.6 Tune-up Procedure

According to CFR (FCC) part 2, subpart 2, section 2.1033 (9).

Please reference the document Tune-up Procedure in TCF.

4.1.7 Applied DC Voltages and Currents

According to CFR (FCC) part 2, subpart 2, section 2.1033 (8)
The voltage and current in the final RF stage is:

Table 9 Applied RF module DC Voltages and Currents

Voltage:	⎓ 3.7V
Current:	1000mA According to CFR (FCC) part 2, subpart 2, section 2.1033(c) (8)

4.2 EUT Identification List

4.2.1 Board Information

Table 10 Board Information

Cdma2000 Digital Mobile Phone		
HUAWEI M835/M835/HUAWEI C8500-3/C8500-3		
Board and Module		
Equipment Designation / Description	Hardware Version	Serial Number
MAINBOARD	HC1C815M	R6U7NA10B2300413

4.2.2 Battery Technical Data

Type:	Rechargeable Li-ion
Manufacturer:	Huawei Technologies Co., Ltd.
Battery Model:	HB4J1H
Rated capacity:	1200mAh
Nominal Voltage:	⎓ +3.7V
Charging Voltage:	⎓ +4.2V

4.2.3 FCC Identification

Grantee Code: **QIS**
Product Code: **M835**
FCC Identification: **QISM835**

5 Main Test Instruments

Main Test Equipments

Equipment Description	Manufacturer	Model	Serial Number	Calibrated until (MM.DD.YYYY)
Receiver	R&S	ESIB 26	100318	04.21.2011
BiLog Antenna	Schaffner	CBL 6112B	2747	11.16.2011
Horn Antenna	ETS-Lindgren	3117	00062553	08.15.2011
Horn Antenna	ETS-Lindgren	3160	00060006	08.03.2011
Dipole	Schwarzbeck	D69250-UHAP/D69250-VHAP	979/917	10.11.2011
Signal Generator	R&S	SMR 40	100325	05.11.2011
Signal Generator	R&S	SMU200A	101717	04.10.2011
Power Supply	Keithley	2306	1045337	05.11.2011
Climate Chamber	WEISS	WK11-180/170	58226049470010	10.23.2011
Universal Radio Communication Tester	R&S	CMU200	112347	03.30.2011
Wireless communication test set	Agilent	8960	GB43461081	05.10.2011
Spectrum Analysis	Agilent	E4440a	MY48250075	07.09.2011
Power Divider	Agilent	11667B	54868	N/A

6 Transmitter Measurements

6.1 Effective Isotropic Radiated Power of Transmitter (EIRP)

6.1.1 Test Conditions

Table 11 Test Conditions

Preconditioning:	1 hour
Measured at:	enclosure
Ambient temperature:	25.6℃
Relative humidity:	52%
Test Configurations:	CDMA TM1 and TM3 at frequency B,M,T EVDO Mode Subtype 0 and Subtype 2 at frequency B,M,T

6.1.2 Test Specifications and Limits

6.1.2.1 Specification

CFR 47 (FCC) part 2.1046 and part 24.232

6.1.2.2 Supporting Standards

Table 12 Supporting Standards:

ANSI/TIA-603-C: 2004	Land Mobile FM or PM Communications Equipment Measurement and Performance Standards
ANSI/TIA-98-E: 2003	Recommended Minimum Performance Standards for cdma2000 Spread Spectrum Mobile Stations

6.1.2.3 Limits

Compliance with part 24.232, in no any case may the peak power of a mobile station transmitter exceed 2 W. And calculate longitude EIRP by following formula：EIRP(dBm)= 10*log ($EIRP_{in\ mwatts}$). EIRP(dBm)=ERP(dBm)+2.15dB.

Table 13 Limits

Maximum Output Power (Watts)	< 2 Watts
Maximum Output Power (dBm)	< 33 dBm

6.1.3 Test Method and Setup

(a) For transmitters other than single sideband, independent sideband and controlled carrier radiotelephone, E.I.R.P. shall be measured when the transmitter is adjusted in accordance with the tune-up procedure to give the values of current and voltage on the circuit elements specified in 2.1033(c)(8). Connect the Mobile Station to the wireless communication tester CMU200 via the air interface. The band class is set as PCS band.
(b) Test the Radiated maximum output power by the CMU200 received from test antenna.
(c) Use substitution method to verify the Maximum output power. The EUT is substituted by a dipole antenna. The dipole is connected to a signal generator. And then adjust the output level of the signal generator to get the same received power recorded in step (b) on

CMU200, and record the power level of Signal Generator. Of course, the cable loss at the test frequency should be compensated.

Test setup

Step 1: Pre-test

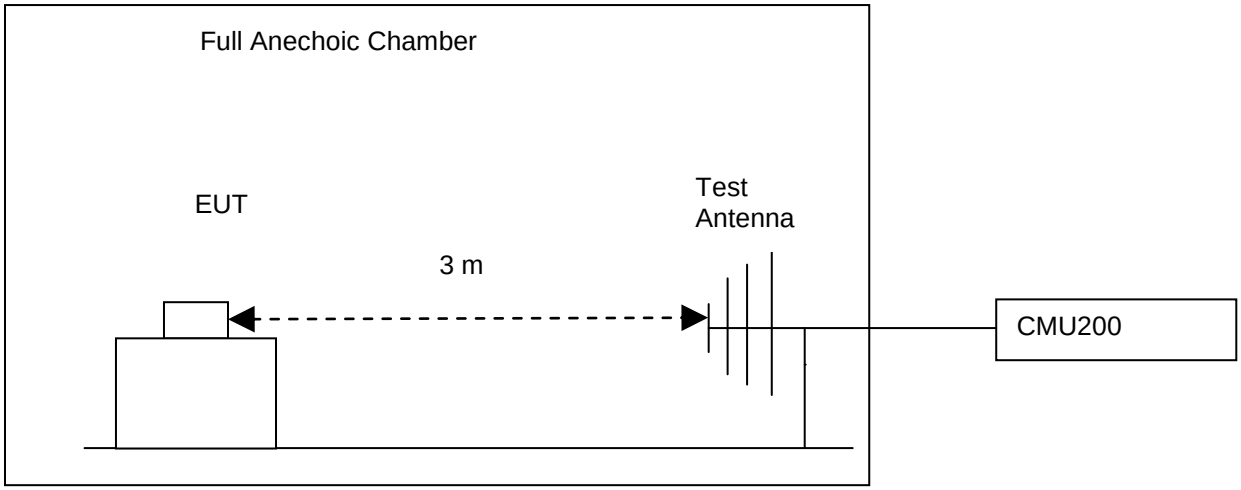

Step 2: Substitution method to verify the maximum EIRP

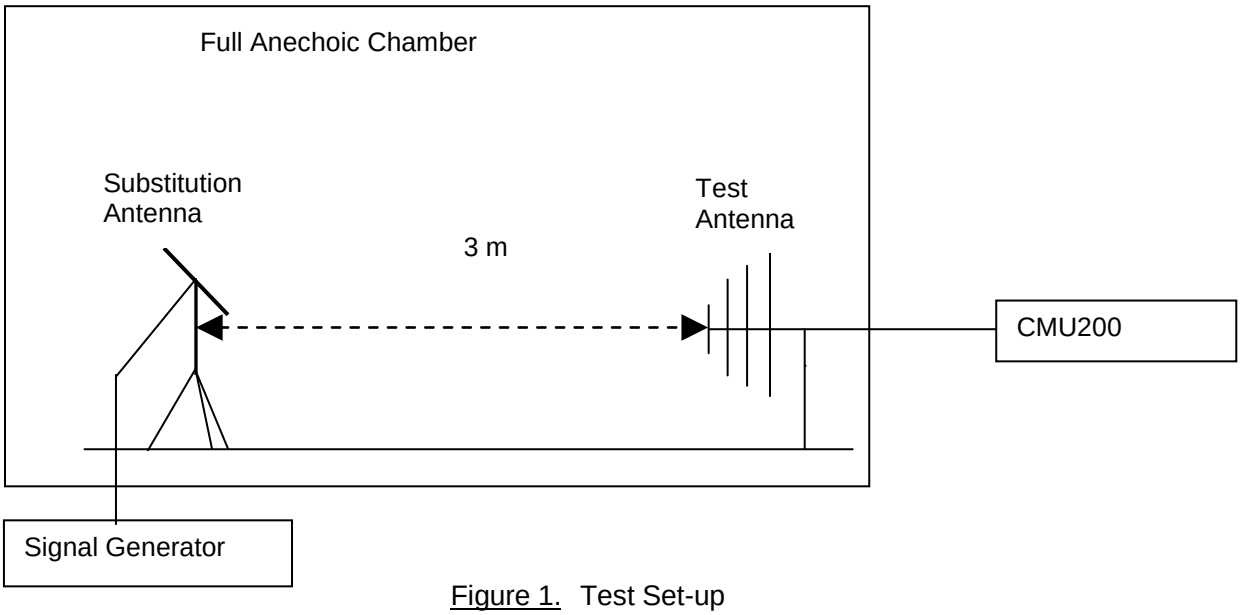

Figure 1. Test Set-up

NOTE:
1.Effective radiated power (ERP) refers to the radiation power output of the EUT, assuming all emissions are radiated from half-wave dipole antennas substitution Results.
2.Effective Isotropic Radiated Power (EIRP). The product of the power supplied to the antenna and the antenna gain in a direction relative to an isotropic antenna.

6.1.4 Measurement Results

Table 14 Measurement Results

		RF Output Power					
TEST CONDITIONS		Channel25(B) 1851.25MHz		Channel525(M) 1876.25MHz		Channel 1175(T) 1908.75MHz	
		dBm		dBm		dBm	
		Measured	Limit	Measured	Limit	Measured	Limit
TM1	T_{nom} (25 °C) V_{nom} (3.7V)	22.76	33	22.74	33	22.57	33
TM3	T_{nom} (25 °C) V_{nom} (3.7V)	22.65	33	22.69	33	22.51	33
Subtype 0	Tnom (25 °C) Vnom (3.7V)	22.51	33	22.77	33	22.19	33
Subtype 2	Tnom (25 °C) Vnom (3.7V)	22.41	33	22.44	33	22.21	33

6.1.4.1 Substitution Results

Table 15 Substitution Results

Test Mode	Freq. [MHz]	Meas. Level [dBm]	Substitution Antenna Type	SGP [dBm]	Substitution Gain [dBi]	Cable Loss [dB]	Substitution Level (EIRP) [dBm]	Limit [dBm]	Result
TM1	1851.25	22.76	Dipole Ant.	25.99	-2.18	1.0	22.81	33	Pass
TM1	1876.25	22.74	Dipole Ant.	26.24	-2.46	1.0	22.78	33	Pass
TM1	1908.75	22.57	Dipole Ant.	26.42	-2.77	1.0	22.65	33	Pass
TM3	1851.25	22.65	Dipole Ant.	25.90	-2.18	1.0	22.72	33	Pass
TM3	1876.75	22.69	Dipole Ant.	26.22	-2.46	1.0	22.76	33	Pass
TM3	1908.75	22.51	Dipole Ant.	26.32	-2.77	1.0	22.55	33	Pass
Subtype 0	1851.25	22.51	Dipole Ant.	25.67	-2.18	1.0	22.49	33	Pass
Subtype 0	1876.25	22.77	Dipole Ant.	26.29	-2.46	1.0	22.83	33	Pass
Subtype 0	1908.75	22.19	Dipole Ant.	25.98	-2.77	1.0	22.21	33	Pass
Subtype 2	1851.25	22.41	Dipole Ant.	25.63	-2.18	1.0	22.45	33	Pass
Subtype 2	1876.75	22.44	Dipole Ant.	25.92	-2.46	1.0	22.46	33	Pass
Subtype 2	1908.75	22.21	Dipole Ant.	26.05	-2.77	1.0	22.28	33	Pass

Note: a, For get the EIRP (Effective Isotropic Radiated Power) in substitution method, the following formula should take to calculate it,

EIRP [dBm] = SGP [dBm] – Cable Loss [dB] + Gain [dBi]

SGP: Signal Generator Level

b, A CDMA EVDO signal with bandwidth of 1.25MHz are created by the vector generator R&S SMU200A.

c, RBW=10kHz, VBW=300kHz, and integrated by the instrument to 1.25MHz.

6.1.5 Conclusion

The equipment **PASSED** the requirement of this clause.

6.2 Conducted output power

6.2.1 Test Conditions

Table 16 Test Conditions

Preconditioning:	0.5 hour
Measured at:	Antenna connector
Ambient temperature:	25.6℃
Relative humidity:	52%
Test Configurations:	CDMA TM1 and TM3 at frequency B,M ,T EVDO Subtype 0 and Subtype 2 at frequency B,M ,T

6.2.2 Test Specifications and Limits

6.2.2.1 Specification

CFR 47 (FCC) part 2.1046 and part 24.232

6.2.2.2 Supporting Standards

Table 17 Supporting Standards:

ANSI/TIA-603-C:2004	Land Mobile FM or PM Communications Equipment Measurement and Performance Standards
ANSI/TIA-98-E: 2003	Recommended Minimum Performance Standards for cdma2000 Spread Spectrum Mobile Stations

6.2.2.3 Limits

Compliance with part 24.232, in no any case may the peak power of a mobile station transmitter exceed 2 W. The calculated longitude EIRP by following formula:

EIRP(dBm)= 10*log ($EIRP_{in\ mwatts}$).

And for conducted power, we can use Antenna Gain to calculate the limit. So the conducted power:

P_{cod}.(dBm)=EIRP(dBm)- Gain(dBi).
and Gain (dBi)= Gain(dBd)+ 2.15dB

Table 18 Limits

Maximum Output Power (Watts)	< 2 Watts=33 dBm
Antenna Gain(dBi):	-1 dBi
Maximum Conducted Output Power (dBm)	< 34dBm

6.2.3 Test Method and Setup

(a)For transmitters other than single sideband, independent sideband and controlled carrier radiotelephone, Conducted maximum power shall be measured when the transmitter is adjusted in accordance with the tune-up procedure to give the values of current and voltage on the circuit elements specified in 2.1033(c)(8). Connect the Mobile Station to the wireless communication tester CMU200 via the antenna connector. The band class is set as PCS band.
(b)Test the Conducted maximum output power by the CMU200.

Test setup

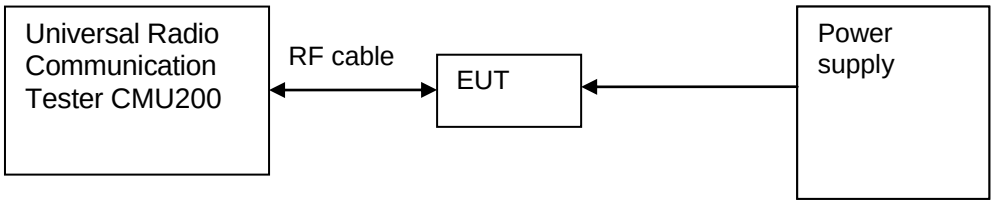

Figure 2. Test Set-up

6.2.4 Measurement Results

Table 19 Measurement Results

TEST CONDITIONS		RF Output Power					
		Channel 25(B) 1851.25MHz		Channel525(M) 1876.25MHz		Channel 1175(T) 1908.75MHz	
		dBm		dBm		dBm	
		Measured	Limit	Measured	Limit	Measured	Limit
TM1	T_{nom} (25 °C) V_{nom} (3.7V)	23.76	34	23.74	34	23.57	34
TM3	T_{nom} (25 °C) V_{nom} (3.7V)	23.65	34	23.69	34	23.51	34
Subtype 0	Tnom (25 °C) Vnom (3.7V)	23.51	34	23.77	34	23.19	34
Subtype 2	Tnom (25 °C) Vnom (3.7V)	23.41	34	23.44	34	23.21	34

6.2.5 Conclusion

The equipment **PASSED** the requirement of this clause.

6.3 Modulation Characteristics

6.3.1 Test Conditions

Table 20 Test Conditions

Preconditioning:	1 hour
Measured at:	Antenna connector
Ambient temperature:	25.6 °C
Relative humidity:	52 %
Test Configurations:	CDMA mode TM1 and TM3 at frequency M EVDO mode Subtype 0 and Subtype 2 at frequency M

6.3.2 Test Specifications and Limits

6.3.2.1 Specification

CFR 47 (FCC) part 2.1047 and part 24 subpart E.

6.3.2.2 Supporting Standards

Table 21 Supporting Standards:

ANSI/TIA-603-C: 2004	Land Mobile FM or PM Communications Equipment Measurement and Performance Standards
ANSI/TIA-98-E: 2003	Recommended Minimum Performance Standards for cdma2000 Spread Spectrum Mobile Stations.

6.3.2.3 Limits

No specific modulation characteristics requirement limits in part 2.1047 and part 24 subpart E.

Table 22 Limits

Limits	Not applicable

6.3.3 Test Method and Setup

Connect the Mobile Station to the Universal Radio Communication Tester CMU200 via the antenna connector. The band class is set as PCS band; the Mobile Station's output is matched with 50 Ω loads. Test method was according to ANSI/TIA-98-E. The waveform quality and constellation of the Mobile Station was tested.

Test setup

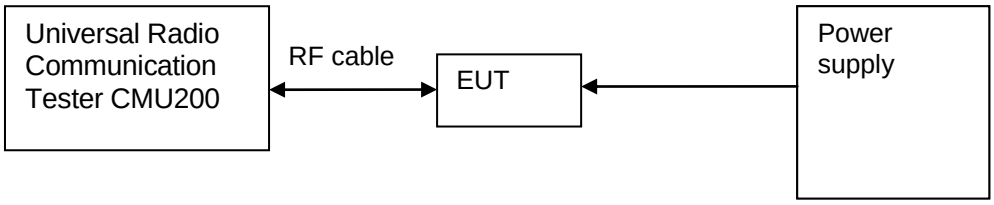

Figure 3. Test Set-up

6.3.4 Measurement Results

Table 23 Measurement Results

		Modulation Characteristic	
TEST CONDITIONS		Channel525(M) 1876.25MHz	
		Measured	
		CDMA Mode TM1 & TM3	EVDO Mode Subtype 0 & Subtype 2
T_{nom} (25 °C)	V_{nom} (3.7V)	Refer to Appendix A	Refer to Appendix A

6.3.5 Conclusion

The equipment **PASSED** the requirement of this clause.

For the measurement results refer to appendix A.

6.4 Occupied Bandwidth

6.4.1 Test Conditions

Table 24 Test Conditions

Preconditioning:	1 hour
Measured at:	RF connector
Ambient temperature:	25.6 °C
Relative humidity:	52 %
Test Configurations:	CDMA TM1 and TM3 at frequency B,M ,T EVDO Mode Subtype 0 and Subtype 2 at frequency B,M ,T

6.4.2 Test Specifications and Limits

6.4.2.1 Specification

CFR 47 (FCC) part 2.1049 and part 24 subpart E.

6.4.2.2 Supporting Standards

Table 25 Supporting Standards:

ANSI/TIA-603-C: 2004	Land Mobile FM or PM Communications Equipment Measurement and Performance Standards
ANSI/TIA-98-E: 2003	Recommended Minimum Performance Standards for cdma2000 Spread Spectrum Mobile Stations.

6.4.2.3 Limits

No specific occupied bandwidth requirement in part 24 subpart E, but the occupied bandwidth was defined in part 2.1049: the frequency bandwidth such that, below its lower and above its upper frequency limits, the mean powers radiated are each equal to 0.5 percent of the total mean power radiated by a given emission shall be measured.

Table 26 Limits

Upper /lower frequency limits	0.5% of the mean power

6.4.3 Test Method and Setup

Mobile Station was connected to the wireless communication test set CMU200 and the Spectrum Analyzer E4440A via the divider. The band class is set as PCS band; Mobile Station was controlled to transmit Maximum power. Measure and record the Occupied Bandwidth of the Mobile Station by the Spectrum Analyzer E4440A

The OBW, that is the frequency bandwidth such that, below its lower and above its upper frequency limits, the mean powers radiated are each equal to 0.5 percent of the total mean power radiated by a given emission shall be measured under the following conditions as applicable:

Refer to 47CFR part2.1049 section (g)&(h).
(g) Transmitter in which the modulating base band comprises not more than three independent

channels - when modulated by the full complement of signals for which the transmitter is rated. The level of modulation for each channel should be set to that prescribed in rule parts applicable to the services for which the transmitter is intended. If specific modulation levels are not set forth in the rules, the tests should provide the manufacturer's maximum rated condition.
(h) Transmitters employing digital modulation techniques - when modulated by an input signal such that its amplitude and symbol rate represent the maximum rated conditions under which the equipment will be operated. The signal shall be applied through any filter networks, pseudorandom generators or other devices required in normal service. Additionally, the occupied bandwidth shall be shown for operation with any devices used for modifying the spectrum when such devices are optional at discretion of the user.

Measurement bandwidth (RBW): 30 kHz (Resolution bandwidth)
Video bandwidth (VBW): 300 kHz

Test Set-up

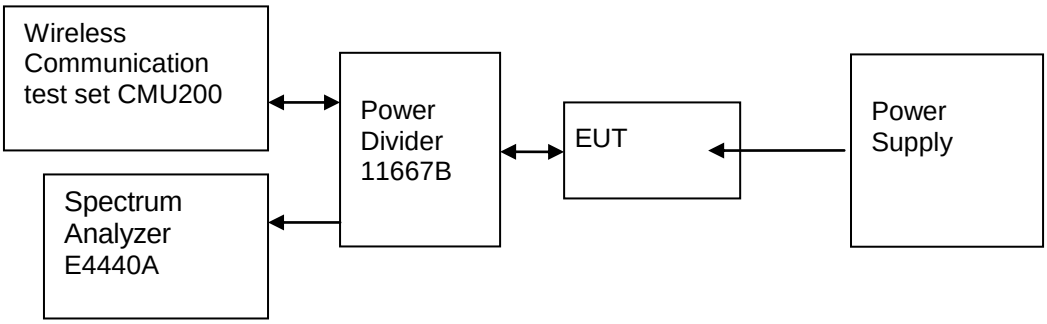

Figure 4. Test Set-up

6.4.4 Measurement Results

Table 27 Measurement Results

		Occupied Bandwidth											
TEST CONDITIONS		Channel25(B) 1851.25MHz				Channel525 (M) 1876.25Mhz				Channel1175(T) 1908.75MHz			
		Measured (MHz)				Measured (MHz)				Measured (MHz)			
		CDMA		EVDO		CDMA		EVDO		CDMA		EVDO	
		TM1	TM3	Subtype 0	Subtype 2	TM1	TM3	Subtype 0	Subtype 2	TM1	TM3	Subtype 0	Subtype 2
Tnom (25 °C)	Vnom (3.7V)	1.28	1.28	1.28	1.28	1.28	1.28	1.28	1.29	1.28	1.28	1.28	1.28

6.4.5 Conclusion

The equipment **PASSED** the requirement of this clause.
For the measurement results refer to appendix B.

6.5 Band Edges Compliance

6.5.1 Test Conditions

Table 28 Test Conditions

Preconditioning:	1 hour
Measured at:	Antenna connector
Ambient temperature:	25.6°C
Relative humidity:	52 %
Test Configurations:	CDMA TM1 and TM3 at frequency B,T EVDO Mode Subtype 0 and Subtype 2 at frequency B,T

6.5.2 Test Specifications and Limits

6.5.2.1 Specification

CFR 47 (FCC) part 2.1051 and part 24.238

6.5.2.2 Supporting Standards

Table 29 Supporting Standards:

ANSI/TIA-603-C: 2004	Land Mobile FM or PM Communications Equipment Measurement and Performance Standards
ANSI/TIA-98-E: 2003	Recommended Minimum Performance Standards for cdma2000 Spread Spectrum Mobile Stations.

6.5.2.3 Limits

Compliance with 24.238, all spurious emission must be attenuated below the transmitter power by at least 43 +10 $\log_{10}$ P. (Whereas P is the rated power of the EUT).

Table 30 Limits

Rated Power:	21.0dBm
Required attenuation:	43+10log (0.125) = 34.0, 21.0dBm – 34.0dB
Absolute level	- 13 dBm

6.5.3 Test Method and Setup

Mobile Station was connected to the wireless communication test set CMU200 and the Spectrum Analyzer E4440A via the divider, the band class is set as PCS band. Mobile Station was controlled to transmit Maximum power. Measure and record Band edge compliance of the Mobile Station by the E4440A.

Measurement bandwidth (RBW): 13 kHz (Resolution bandwidth)
Video bandwidth (VBW): 130 kHz

Test Set-up

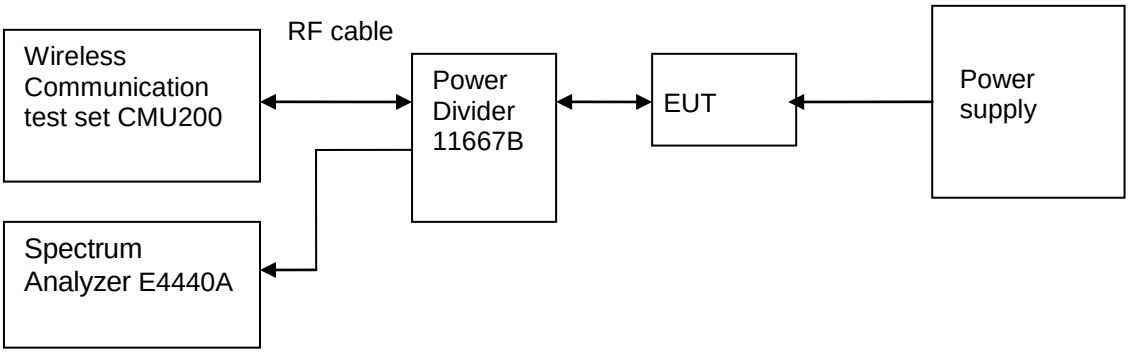

Figure 5. Test Set-up

6.5.4 Measurement Results

Table 31 Measurement Results outside Band Edges-- Single Carrier

Band	Frequency of Band edges [MHz]	Channel Number	Test Mode	Power [dBm]	Spurious Level measured [dBm]	FCC limit	Result
PCS Band	T_{nom} (25 °C), V_{nom} (3.7V)						
	1851.25	25 (B)	TM1 & TM3	24	<-13(See appendix C)	- 13 dBm	Pass
	1908.75	1175 (T)	TM1 & TM3	24	<-13(See appendix C)	- 13 dBm	Pass
PCS Band	T_{nom} (25 °C), V_{nom} (3.7V)						
	1851.25	25 (B)	Subtype 0 & Subtype 2	24	<-13(See appendix C)	- 13 dBm	Pass
	1908.75	1175 (T)	Subtype 0 & Subtype 2	24	<-13(See appendix C)	- 13 dBm	Pass

6.5.5 Conclusion

The equipment **PASSED** the requirement of this clause.
For the measurement results refer to appendix C.

6.6 Spurious Emission at Antenna Terminal

6.6.1 Test Conditions

Table 32 Test Conditions

Preconditioning:	1 hour
Measured at:	Antenna connector
Ambient temperature:	25.6°C
Relative humidity:	52 %
Test Configurations:	CDMA TM1 and TM3 at frequency B,M,T EVDO Mode Subtype 0 and Subtype 2 at frequency B,M,T

6.6.2 Test Specifications and Limits

6.6.2.1 Specification

CFR 47 (FCC) part 2.1051 and part 24.238

6.6.2.2 Supporting Standards

Table 33 Supporting Standards:

ANSI/TIA-603-C: 2004	Land Mobile FM or PM Communications Equipment Measurement and Performance Standards
ANSI/TIA-98-E: 2003	Recommended Minimum Performance Standards for cdma2000 Spread Spectrum Mobile Stations. Release C

6.6.2.3 Limits

Compliance with part 24.238, all spurious emission must be attenuated below the transmitter power by at least 43 +10 $\log_{10}$ P. (Whereas P is the rated power of the EUT).

Table 34 Limits

Rated Power:	21.0 dBm
Required attenuation:	43+10log (0.125) = 34.0 , 21.0 dBm – 34.0 dB
Absolute level	- 13 dBm

6.6.3 Test Method and Setup

Mobile Station was connected to the wireless communication test set CMU200 and the Spectrum Analyzer E4440A via the divider, the band class is set as PCS band. Mobile Station was controlled to transmit Maximum power. Measure and record the Conducted Spurious Emission of the Mobile Station by the Spectrum Analyzer E4440A.

According to part 24.238, the defined measurement bandwidth as following:

24.238(b) Measurement procedure: Compliance with these rules is based on the use of measurement instrumentation employing a resolution bandwidth of 1000 kHz or greater.

Measurement bandwidth (RBW) for 9 kHz up to 150kHz: 1kHz;

Measurement bandwidth (RBW) for 150kHz up to 30MHz: 10kHz;
Measurement bandwidth (RBW) for 30MHz up to 20GHz: 1MHz;

Test Set-up

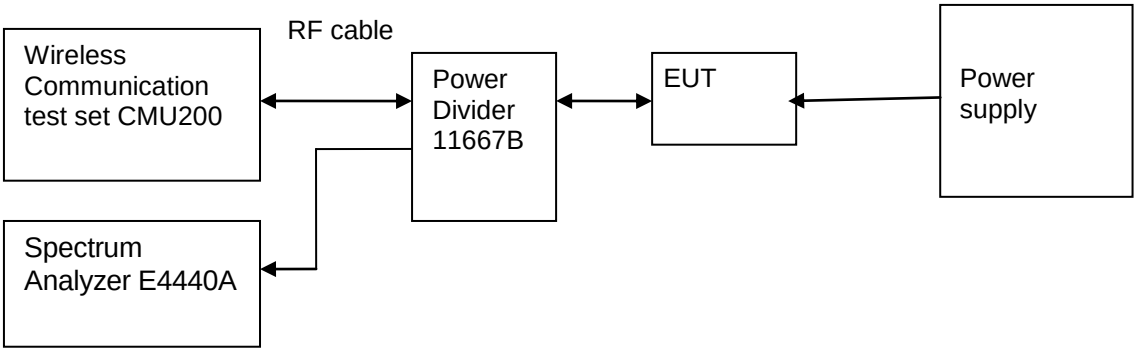

Figure 6. Test Set-up

6.6.4 Measurement Results

Table 35 Measurement Results

Channel Number	Test Mode	Test Range (Frequency)	Output Power [dBm]	Spurious Level measured [dBm]	FCC limit	Result
Channel 25(B)	TM1	9 kHz ~20GHz	24	<- 13 dBm (See appendix_D)	- 13 dBm	Pass
	TM3	9 kHz ~20GHz	24	<- 13 dBm (See appendix_D)	- 13 dBm	Pass
	Subtype 0	9 kHz ~20GHz	24	<- 13 dBm (See appendix_D)	- 13 dBm	Pass
	Subtype 2	9 kHz ~20GHz	24	<- 13 dBm (See appendix_D)	- 13 dBm	Pass
Channel 525(M)	TM1	9 kHz ~20GHz	24	<- 13 dBm (See appendix_D)	- 13 dBm	Pass
	TM3	9 kHz ~20GHz	24	<- 13 dBm (See appendix_D)	- 13 dBm	Pass
	Subtype 0	9 kHz ~20GHz	24	<- 13 dBm (See appendix_D)	- 13 dBm	Pass
	Subtype 2	9 kHz ~20GHz	24	<- 13 dBm (See appendix_D)	- 13 dBm	Pass
Channel 1175(T)	TM1	9 kHz ~20GHz	24	<- 13 dBm (See appendix_D)	- 13 dBm	Pass
	TM3	9 kHz ~20GHz	24	<- 13 dBm (See appendix_D)	- 13 dBm	Pass
	Subtype 0	9 kHz ~20GHz	24	<- 13 dBm (See appendix_D)	- 13 dBm	Pass

	Subtype 2	9 kHz ~20GHz	24	<- 13 dBm (See appendix_D)	- 13 dBm	Pass

6.6.5 Conclusion

The equipment **PASSED** the requirement of this clause.
For the measurement results refer to appendix D.

6.7 Frequency Stability

6.7.1 Test Conditions

Table 36 Test Conditions

Preconditioning:	1 hour
Measured at:	Antenna connector
Ambient temperature:	See below
Relative humidity:	52 % at 25.6 °C
Test Configurations:	CDMA TM1 and TM3 at frequency M EVDO Mode Subtype 0 and Subtype 2 at frequency M

6.7.2 Test Specifications and Limits

6.7.2.1 Specification

CFR 47 (FCC) part 2.1055 and part 24.235

6.7.2.2 Supporting Standards

Table 37 Supporting Standards:

ANSI/TIA-603-C: 2004	Land Mobile FM or PM Communications Equipment Measurement and Performance Standards
EIA/TIA-98E: 2003	Recommended Minimum Performance Standards for cdma2000 Spread Spectrum Mobile Stations.

6.7.2.3 Limits

No specific frequency stability requirement in part 2.1055 and part 24.235.

6.7.3 Test Method and Setup

The frequency stability shall be measured with variation of ambient temperature as follows:
(1) From –30 ° to +50 ° centigrade for all equipment except that specified in subparagraphs
(2) and (3) of paragraph 2.1055

(a) Frequency measurements shall be made at the extremes of the specified temperature range and at intervals of not more than 10° centigrade through the range. A period of time sufficient to stabilize all of the components of the oscillator circuit at each temperature level shall be allowed prior to frequency measurement. The short-term transient effects on the frequency of the transmitter due to keying (except for broadcast transmitters) and any heating element cycling normally occurring at each ambient temperature level also shall be shown. Only the portion or portions of the transmitter containing the frequency determining and stabilizing circuitry need be subjected to the temperature variation test.

(b) The frequency stability shall be measured with variation of primary supply voltage as follows:
(1) Vary primary supply voltage from 85 to 115 percent of the nominal value for other than hand carried battery equipment.
(2) For hand carried, battery powered equipment, reduce primary supply voltage to the battery operating end point, which shall be specified by the manufacturer.

(3) The supply voltage shall be measured at the input to the cable normally provided with the equipment, or at the power supply terminals if cables are not normally provided. Effects on frequency of transmitter keying (except for broadcast transmitters) and any heating element cycling at the nominal supply voltage and at each extreme also shall be shown.
(c) When deemed necessary, the Commission may require tests of frequency stability under conditions in addition to those specifically set out in paragraphs (a), (b), (c) of this section. (For example, measurements showing the effect of proximity to large metal objects, or of various types of antennas, may be required for portable equipment.)

The EUT can only work in such extreme voltage 3.6V and 4.2V，so here the EUT is tested in the 3.6V and 4.2V.

Test Set up

Connect the Mobile Station to the Wireless Communication test set CMU200 via the connector. Then measure the frequency error by the Wireless Communication test set CMU200. The Mobile Station's output is matched with a 50 Ω loads.

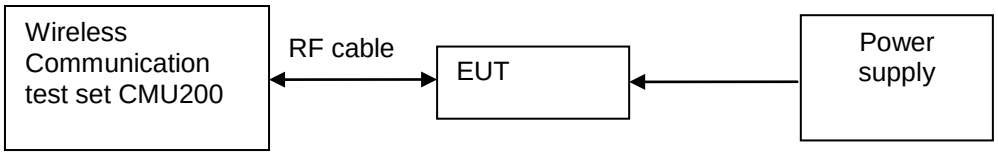

Figure 7. Test Set up

6.7.4 Measurement Results

6.7.4.1 Measurement Results vs. Variation of Temperature

- PCS,TM1, 3.7V DC Channel No.525**(1876.25MHz)**

Table 38 Measurement Results vs. Variation of Temperature—TM1

Temperature	Power (dBm)	Nominal Frequency (MHz)	Measured Frequency Error(Hz)	Result
-30 °C	24	1876.25	-1	Pass
-20 °C	24	1876.25	-12	Pass
-10 °C	24	1876.25	5	Pass
0 °C	24	1876.25	-10	Pass
+10 °C	24	1876.25	7	Pass
+20 °C	24	1876.25	-13	Pass
+30 °C	24	1876.25	-3	Pass
+40 °C	24	1876.25	11	Pass
+50 °C	24	1876.25	9	Pass

- PCS,TM3, 3.7V DC Channel No.525**(1876.25MHz)**

Table 39 Measurement Results vs. Variation of Temperature—TM3

Temperature	Power (dBm)	Nominal Frequency (MHz)	Measured Frequency Error(Hz)	Result
-30 °C	24	1876.25	8	Pass
-20 °C	24	1876.25	-15	Pass
-10 °C	24	1876.25	4	Pass
0 °C	24	1876.25	13	Pass
+10 °C	24	1876.25	-6	Pass
+20 °C	24	1876.25	-10	Pass
+30 °C	24	1876.25	2	Pass
+40 °C	24	1876.25	-9	Pass
+50 °C	24	1876.25	3	Pass

- Subtype 0, 3.7V DC Channel No.525**(1876.25MHz)**

Table 40 Measurement Results vs. Variation of Temperature—EVDO

Temperature	Power (dBm)	Nominal Frequency (MHz)	Measured Frequency Error(Hz)	Result
-30 °C	24	1876.25	-4	Pass
-20 °C	24	1876.25	10	Pass
-10 °C	24	1876.25	-12	Pass
0 °C	24	1876.25	-7	Pass
+10 °C	24	1876.25	6	Pass
+20 °C	24	1876.25	1	Pass
+30 °C	24	1876.25	-14	Pass
+40 °C	24	1876.25	-2	Pass
+50 °C	24	1876.25	-3	Pass

- Subtype 2, 3.7V DC Channel No.525**(1876.25MHz)**

Table 41 Measurement Results vs. Variation of Temperature—EVDO

Temperature	Power (dBm)	Nominal Frequency (MHz)	Measured Frequency Error(Hz)	Result
-30 °C	24	1876.25	−11	Pass
-20 °C	24	1876.25	1	Pass
-10 °C	24	1876.25	−7	Pass
0 °C	24	1876.25	13	Pass
+10 °C	24	1876.25	4	Pass
+20 °C	24	1876.25	−5	Pass
+30 °C	24	1876.25	12	Pass
+40 °C	24	1876.25	−2	Pass
+50 °C	24	1876.25	8	Pass

6.7.4.2 Measurement Results vs. Variation of Voltage

- TM1, 25 °C ,Channel No. 525**(1876.25MHz)**

Table 42 Measurement Results vs. Variation of Voltage—TM1

Voltage	Power (dBm)	Nominal Frequency (MHz)	Measured Frequency Error(Hz)	Result
3.6	24	1876.25	2	Pass
3.7	24	1876.25	-11	Pass
4.2	24	1876.25	8	Pass

- TM3, 25 °C ,Channel No. 525**(1876.25MHz)**

Table 43 Measurement Results vs. Variation of Voltage—TM3

Voltage	Power (dBm)	Nominal Frequency (MHz)	Measured Frequency Error(Hz)	Result
3.6	24	1876.25	-5	Pass
3.7	24	1876.25	13	Pass
4.2	24	1876.25	-9	Pass

- Subtype 0 , 25 °C ,Channel No. 525**(1876.25MHz)**

Table 44 Measurement Results vs. Variation of Voltage—EVDO

Voltage	Power (dBm)	Nominal Frequency (MHz)	Measured Frequency Error(Hz)	Result
3.6	24	1876.25	-4	Pass
3.7	24	1876.25	-14	Pass
4.2	24	1876.25	7	Pass

- Subtype 2 , 25 °C ,Channel No. 525**(1876.25MHz)**

Table 45 Measurement Results vs. Variation of Voltage—EVDO

Voltage	Power (dBm)	Nominal Frequency (MHz)	Measured Frequency Error(Hz)	Result
3.6	24	1876.25	6	Pass
3.7	24	1876.25	-10	Pass
4.2	24	1876.25	-1	Pass

6.7.5 Conclusion

The equipment **PASSED** the requirement of this clause.

7 System Measurement Uncertainty

For a 95% confidence level, the measurement expanded uncertainties for defined systems, in accordance with the recommendations of ISO 17025 as following:

Table 46 System Measurement Uncertainty

Items		Extended Uncertainty
Effective Radiated Power of Transmitter	EIRP(dBm)	U=3dB; k=2
Band Width	Magnitude (%)	U＝0.2%; k=2
Band Edge Compliance	Disturbance Power（dBm）	U＝2.0dB; k=2
Conducted Spurious Emission at Antenna Terminal	Disturbance Power（dBm）	U＝2.0dB; k=2
Frequency Stability	Frequency Accuracy(ppm)	U＝0.21ppm; k=2
Field Strength of Spurious Radiation	EIRP(dBm)	U=2.2dB; k=2
Conducted Output Power	Power(dBm)	U=0.39dB; k=2
Conducted Emission at Power Port	Disturbance Voltage（dBμV）	U=4dB; k=2
Radiated Emission of enclosure at idle mode	Field strength （dBμV/m）	U=5dB; k=2

8 Appendixes

Appendix A	Measurement Results Modulation Characteristics	7 pages
Appendix B	Measurement Results Occupied Bandwidth	13 pages
Appendix C	Measurement Results Band Edges	13 pages
Appendix D	Measurement Results Spurious Emission at Antenna Terminal	73 pages

----- END OF REPORT -----