FCC
RF Test Report

Product Name: Mobile WiFi Smart

Model Number: E355s-6

Report No: SYBH(Z-RF)008122011-2002
FCC ID：QISE355S-6

Reliability Laboratory of Huawei Technologies Co., Ltd.

Huawei Base, Bantian, Longgang District, Shenzhen 518129, P.R. China

Tel: +86 755 28780808 Fax: +86 755 89652518

Notice

1. The laboratory has obtained the accreditation of China National Accreditation Service for Conformity Assessment (CNAS), and accreditation number: L0310.
2. The laboratory has been listed on the US Federal Communications Commission list of test facilities recognized to perform electromagnetic emissions measurements. The site recognition number is 97456.
3. The laboratory has been listed by industry Canada to perform electromagnetic emission measurement. The site recognition number is 6369A-2.
4. The test report is invalid if not marked with "exclusive stamp for the test report".
5. The test report is invalid if not marked with the stamps or the signatures of the persons responsible for performing, revising and approving the test report.
6. The test report is invalid if there is any evidence of erasure and/or falsification.
7. If there is any dissidence for the test report, please file objection to the test centre within 15 days from the date of receiving the test report.
8. Normally, the test report is only responsible for the samples that have undergone the test.
9. Context of the test report cannot be used partially or in full for publicity and/or promotional purposes without previous written approval of the laboratory.

Applicant:	Huawei Technologies Co., Ltd.
Address:	Huawei Base, Bantian, Longgang District, Shenzhen 518129, P.R. China
Date of Receipt Test Item:	Dec.17, 2011
Start Date of Test:	Dec.18, 2011
End Date of Test:	Dec.23, 2011

Test Result:	Pass

	Date	Name	Signature
Approved By	Dec.26, 2011	Dai Linjun	Dai Linjun
Reviewed By	Dec.26, 2011	Cousy Xu	Cousy XU
Operator	Dec.26, 2011	Huang Qiuliang	Huang Qiuliang

Contents

1 General Information **5**

1.1 APPLIED STANDARD 5
1.2 TEST LOCATION 5
1.3 TEST ENVIRONMENT CONDITION 5

2 Test Summary **6**

3 Product Description **7**

3.1 PRODUCTION INFORMATION 7
3.2 TEST DESCRIPTION 8

4 General Test Conditions / Configurations **9**

4.1 RF CHANNELS UNDER TEST 9
4.2 TEST MODES 9
4.3 TEST ENVIRONMENTS 9
4.4 TEST SETUPS 10
4.5 TEST CONDITIONS 12

5 Main Test Instruments **14**

6 Test Results **15**

7 Measurement Uncertainty **16**

1 General Information

1.1 Applied Standard

Applied Rules:	47 CFR FCC Part 2, Subpart J 47 CFR FCC Part 24, Subpart E

1.2 Test Location

Test Location 1:	Reliability Laboratory of Huawei Technologies Co., Ltd.
Address:	Huawei Base, Bantian, Longgang District, Shenzhen 518129, P.R. China

1.3 Test Environment Condition

Ambient Temperature:	20 – 25 °C
Ambient Relative Humidity:	45 – 55 %
Atmospheric Pressure:	101 kPa

2 Test Summary

Table 1 Summary of results

PCS Band			
Test Case	FCC Part No.	Requirements	Result
Transmitter Output Power	2.1046 & 24.232	Peak EIRP not exceed 2 W	Pass
Modulation Characteristics	2.1047	Digital modulation	Pass
Occupied Bandwidth	2.1049	(Not specified)	Pass
Band Edges Compliance	2.1051 & 24.238	Below -13 dBm/1%*EBW, in 1 MHz range	Pass
Spurious Emission at Antenna Terminals	2.1051 & 24.238	Below -13 dBm/1 kHz, 9 kHz to 150 kHz Below -13 dBm/10 kHz, 150 kHz to 30 MHz Below -13 dBm/1 MHz, 30 MHz to 10th harmonics	Pass
Radiated Spurious Emissions	2.1053 & 24.238	Below -13 dBm/1 MHz	Pass
Frequency Stability	2.1055 & 24.235	Stay within the authorized frequency block	Pass

Confidential Information of Huawei.
No Distribution without Written Permission

3 Product Description

3.1 Production Information

3.1.1 General Description

E355s-6 is a multi mode Mobile WiFi Smart which supports HSPA+/HSPA/WCDMA/EDGE/GPRS/GSM mode. It implements these functions: package data service by HSPA+/HSPA/WCDMA/EDGE/GPRS and SMS etc. E355s-6 can be used as WiFi Access Point. Clients can connect to it by standard USB interface or by WiFi radio interface. Up to 5 WiFi stations can be connected at the same time exclude the USB connected user. USIM card interface and microSD card interface are provided by E355s-6.

3.1.2 Board

Table 2 Board Information

Mobile WiFi Smart		
E355s-6		
Board and Module		
Equipment Designation / Description	Software Version	Hardware Version
MAINBOARD	21.157.06.31.00	CH1E355SM

3.2 Test Description

3.2.1 Supported Frequency Range

Characteristics	Description
Downlink	1930 to 1990 MHz
Uplink	1850 to 1910MHz

3.2.2 Transmitter / Receiver Characteristics

Characteristics	Description
System Type	GSM UMTS
TX Output Power (per Antenna Port)	GSM system: 30dBm UMTS system: 24dBm
Channel Spacing(s) / Bandwidth(s)	GSM system: 200 kHz UMTS system: 5 MHz
Designation of Emissions	GSM system: 247KGXW (GMSK modulation), 255KG7W (8PSK modulation)) UMTS system: 4M20F9W

3.2.3 Antenna Gain

Antenna Gain(dBi):	2.34
Antenna Gain(dBd):	0.19

3.2.4 Power Supply

	Description
Power Supply Type	Directly Connected to DC /AC Power Supply
Input to Adapter (DC power)	DC Voltage Nominal: ⎓ +5V DC Voltage Range: ⎓ +4.75 V to +5.25V

4 General Test Conditions / Configurations

4.1 RF Channels under Test

Test Mode	TX / RX	RF Channel		
		Bottom (B)	Middle (M)	Top (T)
TM1/TM2	TX	Channel 512	Channel 661	Channel 810
		1850.2MHz	1880.0MHz	1909.8MHz
	RX	Channel 512	Channel 661	Channel 810
		1930.2 MHz	1960.0 MHz	1989.8 MHz
TM3/TM4/TM5	TX	Channel 9262	Channel9400	Channel9538
		1852.4MHz	1880.0MHz	1907.6MHz
	RX	Channel 9662	Channel 9800	Channel 9938
		1932.4 MHz	1960.0 MHz	1987.6 MHz

4.2 Test Modes

Test Mode	Test Modes Description
TM1	GSM/GPRS, GMSK modulation
TM2	EDGE, 8PSK modulation
TM3	WCDMA QPSK modulation
TM4	HSDPA 16QAM modulation
TM5	HSUPA 16QAM modulation

4.3 Test Environments

Environment Parameter	Selected Values During Tests	
Relative Humidity	Ambient	
Temperature	TN	Ambient
Voltage	VL	4.75V
	VN	5.0V
	VH	5.25V

NOTE: VL= lower extreme test voltages
VN= nominal voltage
VH= upper extreme test voltage
TN= nominal temperature

4.4 Test Setups

4.4.1 General Test Setup Configurations

Configuration	Description
Test Antenna Ports	Until otherwise declared, all TX tests are ONLY performed at the main Transmitter antenna port (e.g. TRXA, TXA and so on) of the EUT, and all RX tests are ONLY performed at the main Receiver antenna port (e.g. TRXA, RXA and so on) of the EUT.
Multiple RF Sources	Other than the tested RF source of the EUT, other RF source(s) are disabled or shutdown during measurements.

4.4.2 Test Setup 1

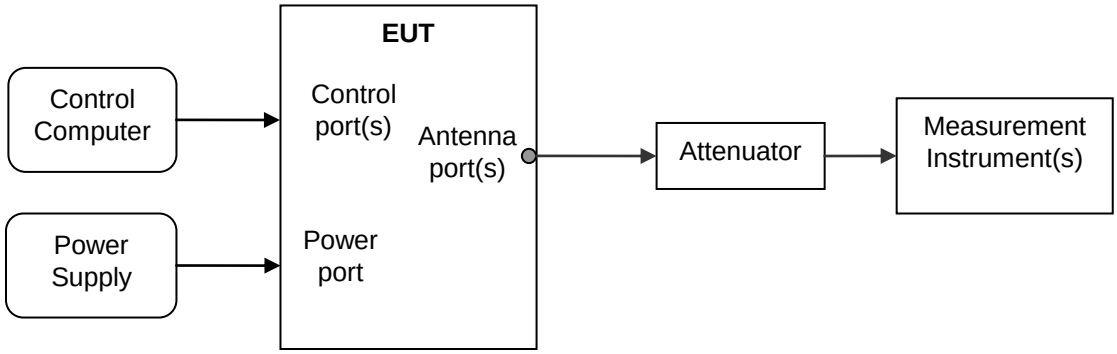

4.4.3 Test Setup 2

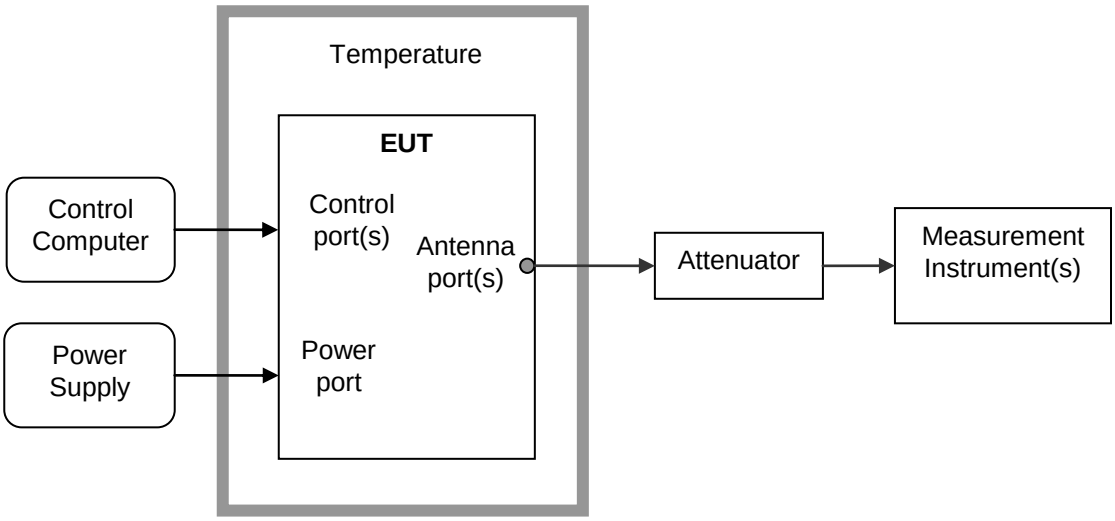

4.4.4 Test Setup 3

NOTE: Effective Isotropic radiated power (EIRP) refers to the radiation power output of the EUT, assuming all emissions are radiated from half-wave dipole antennas.

Step 1: Pre-test

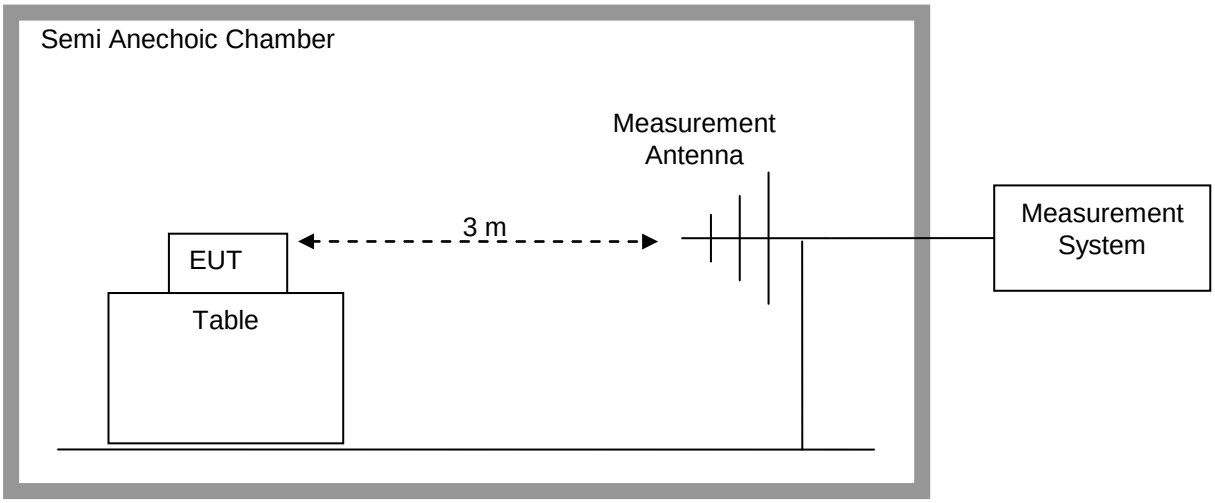

Step 2: Substitution method to verify the maximum EIRP

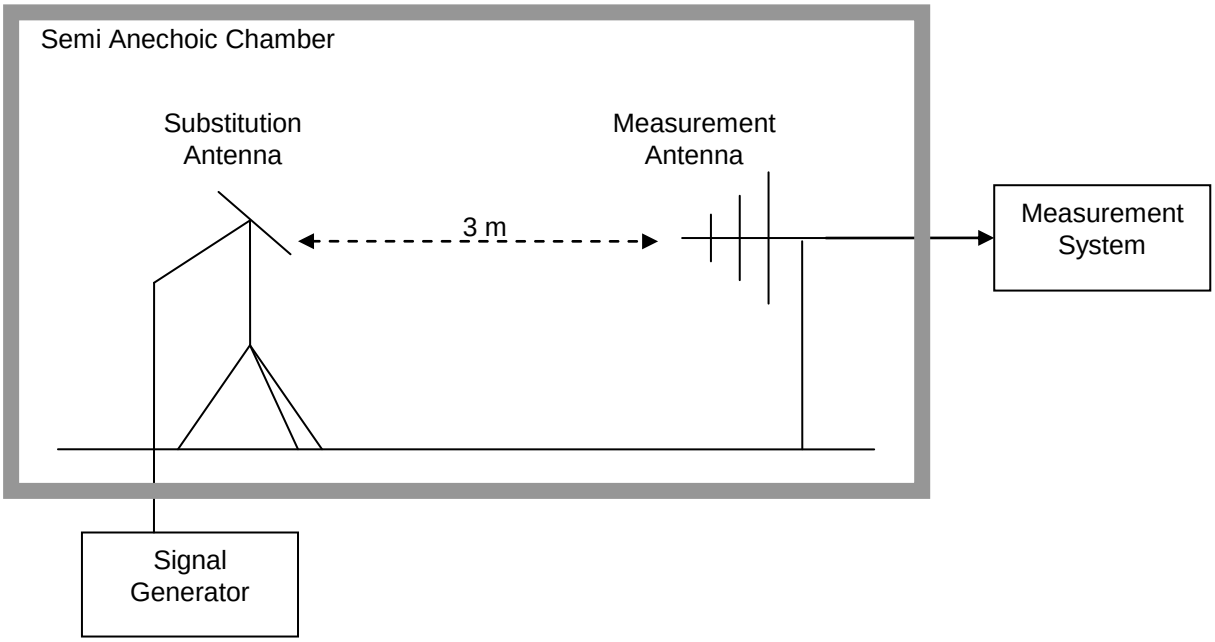

4.5 Test Conditions

Test Case	Test Conditions	
Transmitter Output Power	Test Configuration	Ambient Temperature & Rated Voltage
	Test Setup	Test Setup 1&Setup 3
	Detector	RMS
	RF Channels (TX)	B, M, T
	Test Mode	TM1/TM2/TM3/TM4/TM5
Modulation Characteristics	Test Configuration	Ambient Temperature & Rated Voltage
	Test Setup	Test Setup 1
	RF Channels (TX)	M
	Test Mode	TM1/TM2/TM3
Occupied Bandwidth	Test Configuration	Ambient Temperature & Rated Voltage
	Test Setup	Test Setup 1
	Detector	PK
	RF Channels (TX)	B, M, T
	Test Mode	TM1/TM2/TM3
Band Edges Compliance	Test Configuration	Ambient Temperature & Rated Voltage
	Test Setup	Test Setup 1
	Detector	RMS
	RF Channels (TX)	B, T
	Test Mode	TM1/TM2/TM3
Spurious Emission at Antenna Terminals	Test Configuration	Ambient Temperature & Rated Voltage
	Test Setup	Test Setup 1
	Detector	PK
	RF Channels (TX)	B, M,T
	Test Mode	TM1/TM2/TM3
Radiated Spurious Emissions	Test Configuration	Ambient Temperature & Rated Voltage
	Test Setup	Test Setup 3
	Detector	PK
	RF Channels (TX)	M
	Test Mode	TM1/TM2/TM3/TM4/TM5
Frequency Stability	Test Configuration	(1) -30 °C to +50 °C with step 10 °C at Rated Voltage; (2) 85%, 100% and 115% of Rated Voltage at Ambient Temperature.
	Test Setup	Test Setup 2
	RF Channels (TX)	M

Test Case	Test Conditions	
	Test Mode	TM1/TM2/TM3

5 Main Test Instruments

Table 3 Main Test Equipments

Equipment Description	Manufacturer	Model	Serial Number	Calibrated until
Power supply	KEITHLEY	2303	1288003	Sep.27,2012
Universal Radio Communication Tester	R&S	CMU200	117341	Jan.13.2012
Universal Radio Communication Tester	Agilent	E5515C	MY50260239	Aug.31,2012
Spectrum Analyzer	Agilent	E4440A	MY49420179	Apr.20,2012
Signal Analyzer	R&S	FSQ31	200021	Sep.27,2012
Temperature Chamber	WEISS	WKL64	24600294	Jan.03,2012
Signal generator	Agilent	E8257D	MY49281095	Jul.09.2012
Test receiver	R&S	ESU26	100150	May.29.2012
Tunable Dipole	Schwarzbeck	D69250-UHAP/D69250-VHAP	919/1009	Jan.29.2012
Tunable Dipole	Schwarzbeck	D69250-UHAP/D69250-VHAP	979/917	Jan.29.2012
Horn Antenna	R & S	HF906	100683	May.15, 2012
Horn Antenna	R & S	HF906	100684	Jul.01, 2012
Broadband Antenna	Schwarzbeck	VULB 9163	9163-357	May.15, 2012
Broadband Antenna	Schwarzbeck	VULB 9163	9163-356	May.15, 2012

6 Test Results

No.	Test Item	Test Result
1	Transmitter Output Power	Appendix A
2	Modulation Characteristics	Appendix B
3	Occupied Bandwidth	Appendix C
4	Band Edges Compliance	Appendix D
5	Spurious Emission at Antenna Terminals	Appendix E
6	Radiated Spurious Emissions	Appendix F
7	Frequency Stability	Appendix G
8	Photos of Radiated Spurious Emissions	Appendix H

NOTE: The Appendix H only photos of Radiated Spurious Emissions, no test data.

7 Measurement Uncertainty

For a 95% confidence level (k=2), the measurement expanded uncertainties for defined systems, in accordance with the recommendations of ISO 17025 as following:

Test Item		Extended Uncertainty
Transmitter Output Power	Power (dBm)	U =0.39 dB
Occupied Bandwidth	Magnitude (%)	U=0.2%
Band Edge Compliance	Disturbance Power (dBm)	U=2.0 dB
Conducted Spurious Emissions	Disturbance Power (dBm)	U=2.0 dB
Field Strength of Spurious Radiation	ERP (dBm)	U=4.6 dB (30 MHz – 1GHz) U=3.0 dB (above 1 GHz)
Frequency Stability	Frequency Accuracy (ppm)	U=0.21 ppm