# FCC
# RF Test Report

**Product Name: HSPA+ USB Stick**

**Model Number: E303s-63**

**Report No: SYBH(Z-RF)011022012-2001**
**FCC ID: QISE303S-63**


**Reliability Laboratory of Huawei Technologies Co., Ltd.**

Huawei Base, Bantian, Longgang District, Shenzhen 518129, P.R. China

Tel: +86 755 28780808 Fax: +86 755 89652518

# Notice

1. The laboratory has obtained the accreditation of China National Accreditation Service for Conformity Assessment (CNAS), and accreditation number: L0310.
2. The laboratory has been listed on the US Federal Communications Commission list of test facilities recognized to perform electromagnetic emissions measurements. The site recognition number is 97456.
3. The laboratory has been listed by industry Canada to perform electromagnetic emission measurement. The site recognition number is 6369A-2.
4. The test report is invalid if not marked with "exclusive stamp for the test report".
5. The test report is invalid if not marked with the stamps or the signatures of the persons responsible for performing, revising and approving the test report.
6. The test report is invalid if there is any evidence of erasure and/or falsification.
7. If there is any dissidence for the test report, please file objection to the test centre within 15 days from the date of receiving the test report.
8. Normally, the test report is only responsible for the samples that have undergone the test.
9. Context of the test report cannot be used partially or in full for publicity and/or promotional purposes without previous written approval of the laboratory.

| | |
|---|---|
| **Applicant:** | Huawei Technologies Co., Ltd. |
| **Address:** | Huawei Base, Bantian, Longgang District, Shenzhen 518129, P.R. China |
| **Date of Receipt Test Item:** | Feb.12, 2012 |
| **Start Date of Test:** | Feb.13, 2012 |
| **End Date of Test:** | Feb.17, 2012 |

**Test Result:** Pass

| | Date | Name | Signature |
|---|---|---|---|
| Approved By Senior Engineer | Feb.18, 2012 | Dai Linjun | Dai Linjun |
| Reviewed By | Feb.18, 2012 | Cousy Xu | Cousy XU |
| Operator | Feb.18, 2012 | Huang Qiuliang | Huang Qiuliang |


Confidential Information of Huawei.
No Distribution without Written Permission

# Contents

1 General Information ..... 5
1.1 APPLIED STANDARD ..... 5
1.2 TEST LOCATION ..... 5
1.3 TEST ENVIRONMENT CONDITION ..... 5
2 Summary ..... 6
3 Product Description ..... 7
3.1 PRODUCTION INFORMATION ..... 7
4 Test Description ..... 8
4.1 SUPPORTED FREQUENCY RANGE ..... 8
4.2 TRANSMITTER / RECEIVER CHARACTERISTICS ..... 8
4.3 ANTENNA GAIN ..... 8
4.4 POWER SUPPLY ..... 8
5 General Test Conditions / Configurations ..... 9
5.1 RF CHANNELS UNDER TEST ..... 9
5.2 TEST MODES ..... 9
5.3 TEST ENVIRONMENTS ..... 9
5.4 TEST SETUPS ..... 10
5.5 TEST CONDITIONS ..... 12
6 Main Test Instruments ..... 14
7 Test Results ..... 15
8 Measurement Uncertainty ..... 15

# 1 General Information

## 1.1 Applied Standard

| | |
|---|---|
| Applied Rules: | 47 CFR FCC Part 2:2010, Subpart J<br>47 CFR FCC Part 22:2010, Subpart H<br>ANSI/TIA 603C:2004 |

## 1.2 Test Location

| | |
|---|---|
| Test Location 1: | Reliability Laboratory of Huawei Technologies Co., Ltd. |
| Address: | Huawei Base, Bantian, Longgang District, Shenzhen 518129, P.R. China |

## 1.3 Test Environment Condition

| | |
|---|---|
| Ambient Temperature: | 20 – 25 °C |
| Ambient Relative Humidity: | 45 – 55 % |
| Atmospheric Pressure: | 101 kPa |

# 2 Summary

Table 1 Summary of results

| Test Case | FCC Part No. | Requirements | Result |
|---|---|---|---|
| Cellular Band | | | |
| Transmitter Output Power | 2.1046 & 22.913 | ERP not exceed 7 W<br>Peak-to-average ratio not exceed 13 dB | Pass |
| Modulation Characteristics | 2.1047 | Digital modulation | Pass |
| Occupied Bandwidth | 2.1049 | (Not specified) | Pass |
| Band Edges Compliance | 2.1051 & 917 | Below -13 dBm/1%*EBW, in 1 MHz range | Pass |
| Spurious Emission at Antenna Terminals | 2.1051 & 2.917 | Below -13 dBm/1 kHz, 9 kHz to 150 kHz<br>Below -13 dBm/10 kHz, 150 kHz to 30 MHz<br>Below -13 dBm/100 kHz, 30 MHz to 10$^{th}$ harmonics | Pass |
| Field Strength of Spurious Radiation | 2.1053 & 22.917 | Below -13 dBm/100 kHz | Pass |
| Frequency Stability | 2.1055 & 22.355 | Maintained within the tolerances of ±2.5ppm | Pass |


Confidential Information of Huawei.
No Distribution without Written Permission

# 3 Product Description

## 3.1 Production Information

### 3.1.1 General Description

E303s-63 HSPA/WCDMA/EDGE/GPRS/GSM dual mode USB Stick is subscriber equipment in the UMTS/GSM system. E303s-63 implement such functions as RF signal receiving/transmitting, HSPA/WCDMA and EDGE/GPRS/GSM protocol processing, data service etc. Externally it provides USB interface (to connect to the notebook etc.), USIM card interface and Micro SD card interface. (EDGE only support downlink, don't support uplink.)

### 1.3.1 Board Information

Table 2 Board Information

| HSPA+ USB Stick | | |
|---|---|---|
| E303s-63 | | |
| Board and Module | | |
| Serial Number | Software Version | Hardware Version |
| C5U01A11C3000011 | 21.157.10.01.864 | CH2E303SM |

# 4 Test Description

## 4.1 Supported Frequency Range

| Characteristics | Description |
|---|---|
| Downlink | 869 to 894 MHz; |
| Uplink | 824 to 849 MHz |

## 4.2 Transmitter / Receiver Characteristics

| Characteristics | Description |
|---|---|
| System Type | GSM |
| TX Output Power (per Antenna Port) | GSM system: 33dBm; |
| Channel Spacing(s) / Bandwidth(s) | GSM system: 200 kHz |
| Designation of Emissions | GSM system: 246KGXW (GMSK modulation), |

## 4.3 Antenna Gain

| | |
|---|---|
| Antenna Gain(dBi) | 2.22 |
| Antenna Gain(dBd) | 0.07 |

## 4.4 Power Supply

| Specification | Description |
|---|---|
| Power Supply Type | Directly Connected to DC /AC Power Supply |
| Input to EUT (DC power) | DC Voltage Nominal: ⎓ 5.0 V<br>DC Voltage Range: ⎓ 4.75 V to 5.25 V |
| Input to EUT (AC power) | AC Voltage Nominal: ~ 230 V (50/60 Hz)<br>AC Voltage Range: ~100-240V |

# 5 General Test Conditions / Configurations

## 5.1 RF Channels under Test

| Test Mode | TX / RX | RF Channel | | |
|---|---|---|---|---|
| | | Bottom (B) | Middle (M) | Top (T) |
| TM1 | TX | Channel 128 | Channel 192 | Channel 251 |
| | | 824.2MHz | 837.0MHz | 848.8MHz |
| | RX | Channel 128 | Channel 192 | Channel 251 |
| | | 869.2MHz | 882.0MHz | 893.8MHz |

## 5.2 Test Modes

| Test Mode | Test Modes Description |
|---|---|
| TM1 | GSM/GPRS, GMSK modulation |

## 5.3 Test Environments

| Environment Parameter | Selected Values During Tests | |
|---|---|---|
| Relative Humidity | Ambient | |
| Temperature | TN | Ambient |
| Voltage | VL | 3.3V |
| | VN | 3.8V |
| | VH | 4.2V |

NOTE: VL= lower extreme test voltages
VN= nominal voltage
VH= upper extreme test voltage
TN= normal temperature


Confidential Information of Huawei.
No Distribution without Written Permission

## 5.4 Test Setups

### 5.4.1 General Test Setup Configurations

| Configuration | Description |
|---|---|
| Test Antenna Ports | Until otherwise declared, all TX tests are ONLY performed at the main Transmitter antenna port (e.g. TRXA, TXA and so on) of the EUT, and all RX tests are ONLY performed at the main Receiver antenna port (e.g. TRXA, RXA and so on) of the EUT. |
| Multiple RF Sources | Other than the tested RF source of the EUT, other RF source(s) are disabled or shutdown during measurements. |

### 5.4.2 Test Setup 1

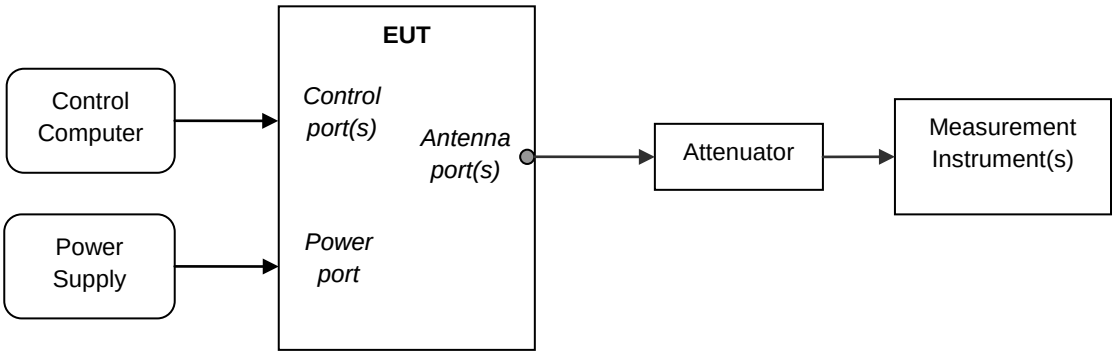


### 5.4.3 Test Setup 2

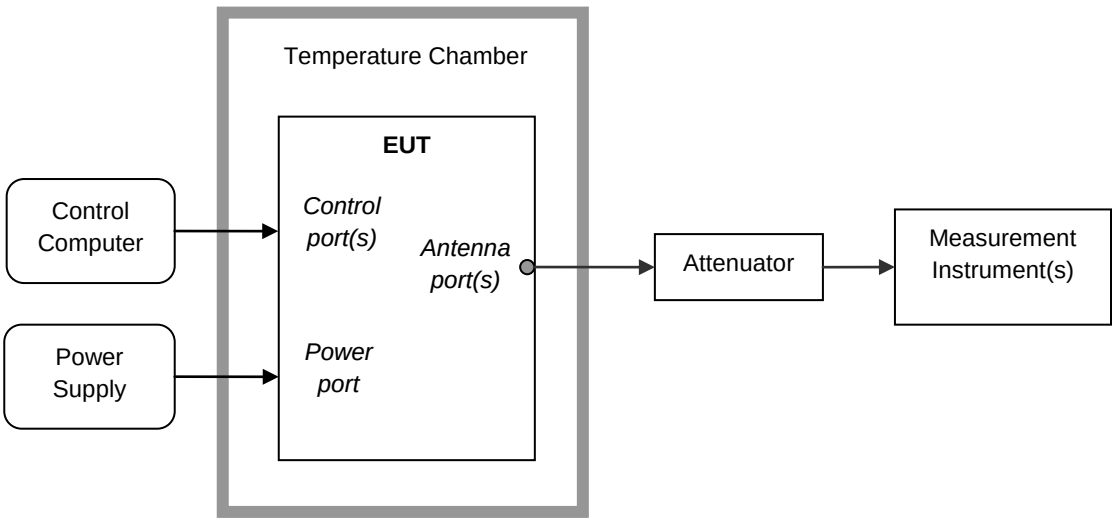

### 5.4.4 Test Setup 3

NOTE: Effective radiated power (ERP) refers to the radiation power output of the EUT, assuming all emissions are radiated from half-wave dipole antennas.

Step 1: Pre-test

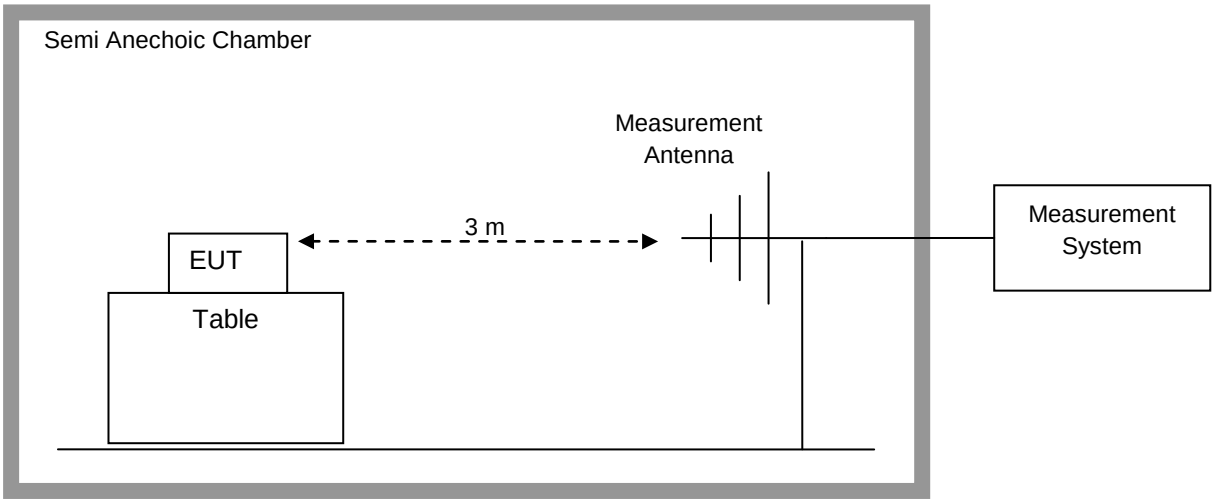


Step 2: Substitution method to verify the maximum ERP

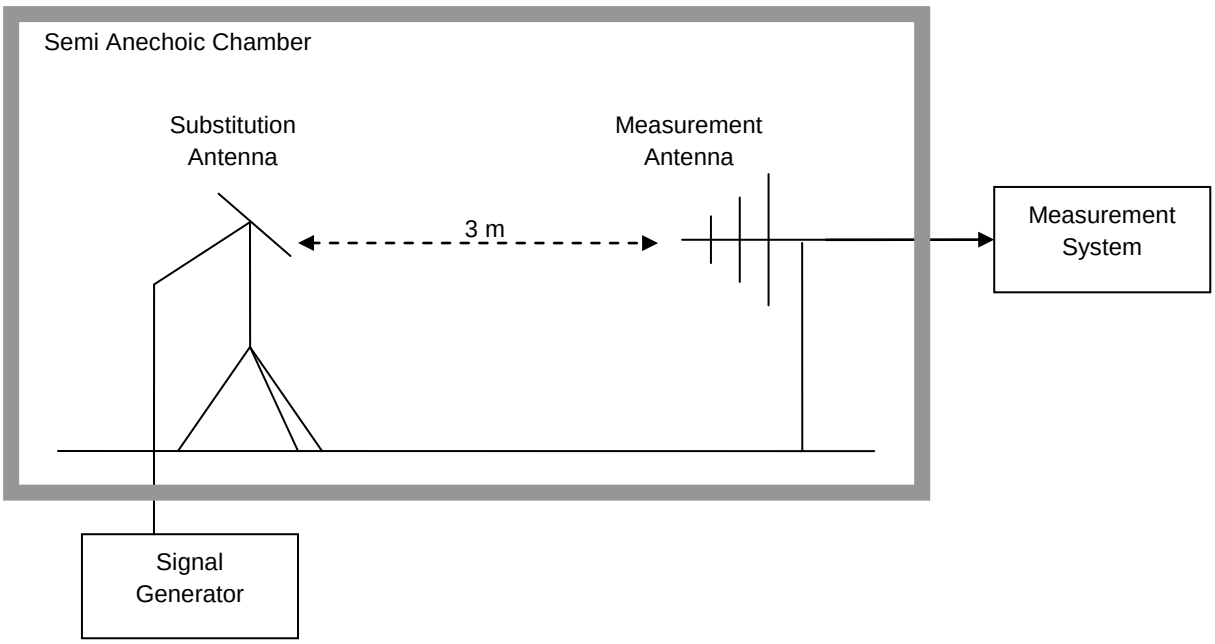

## 5.5 Test Conditions

| Test Case | Test Conditions | |
|---|---|---|
| Transmitter Output Power | Test Configuration | Ambient Temperature & Rated Voltage |
| | Test Setup | Test Setup 1 & Test Setup 3 |
| | Detector | RMS |
| | RF Channels (TX) | B, M, T |
| | Test Mode | TM1 |
| Modulation Characteristics | Test Configuration | Ambient Temperature & Rated Voltage |
| | Test Setup | Test Setup 1 |
| | RF Channels (TX) | M |
| | Test Mode | TM1 |
| Occupied Bandwidth | Test Configuration | Ambient Temperature & Rated Voltage |
| | Test Setup | Test Setup 1 |
| | Detector | PK |
| | RF Channels (TX) | B, M, T |
| | Test Mode | TM1 |
| Band Edges Compliance | Test Configuration | Ambient Temperature & Rated Voltage |
| | Test Setup | Test Setup 1 |
| | Detector | RMS |
| | RF Channels (TX) | B, T |
| | Test Mode | TM1 |
| Spurious Emission at Antenna Terminals | Test Configuration | Ambient Temperature & Rated Voltage |
| | Test Setup | Test Setup 1 |
| | Detector | PK |
| | RF Channels (TX) | B, M,T |
| | Test Mode | TM1 |
| Field Strength of Spurious Radiation | Test Configuration | Ambient Temperature & Rated Voltage |
| | Test Setup | Test Setup 3 |
| | Detector | PK |
| | RF Channels (TX) | M |
| | Test Mode | TM1 |
| Frequency Stability | Test Configuration | (1) -30 °C to +50 °C with step 10 °C at Rated Voltage;<br>(2) 85%, 100% and 115% of Rated Voltage at Ambient Temperature. |
| | Test Setup | Test Setup 2 |

| Test Case | Test Conditions | |
|---|---|---|
| | RF Channels (TX) | M |
| | Test Mode | TM1 |

# 6 Main Test Instruments

Table 3 Main Test Equipments

| Equipment Description | Manufacturer | Model | Serial Number | Calibrated until |
|---|---|---|---|---|
| Power supply | KEITHLEY | 2303 | 1288003 | Sep.27,2012 |
| Universal Radio Communication Tester | R&S | CMU200 | 117341 | Jan.12.2013 |
| Universal Radio Communication Tester | Agilent | E5515C | MY50260239 | Aug.31,2012 |
| Spectrum Analyzer | Agilent | E4440A | MY49420179 | Apr.20,2012 |
| Signal Analyzer | R&S | FSQ31 | 200021 | Sep.27,2012 |
| Temperature Chamber | WEISS | WKL64 | 24600294 | Jan.03,2013 |
| Signal generator | Agilent | E8257D | MY49281095 | Jul.09.2012 |
| Test receiver | R&S | ESU26 | 100150 | May.29.2012 |
| Tunable Dipole | Schwarzbeck | D69250-UHAP/D69250-VHAP | 919/1009 | Jan.29.2013 |
| Tunable Dipole | Schwarzbeck | D69250-UHAP/D69250-VHAP | 979/917 | Jan.29.2013 |
| Horn Antenna | R & S | HF906 | 100683 | May.15, 2012 |
| Horn Antenna | R & S | HF906 | 100684 | Jul.01, 2012 |
| Broadband Antenna | Schwarzbeck | VULB 9163 | 9163-357 | May.15, 2012 |
| Broadband Antenna | Schwarzbeck | VULB 9163 | 9163-356 | May.15, 2012 |


Confidential Information of Huawei.
No Distribution without Written Permission

# 7 Test Results

| No. | Test Item | Test Result |
|---|---|---|
| 1 | Transmitter Output Power | Appendix A |
| 2 | Modulation Characteristics | Appendix B |
| 3 | Occupied Bandwidth | Appendix C |
| 4 | Band Edges Compliance | Appendix D |
| 5 | Spurious Emission at Antenna Terminals | Appendix E |
| 6 | Field Strength of Spurious Radiation | Appendix F |
| 7 | Frequency Stability | Appendix G |
| 8 | Photos of Field Strength of Spurious Radiation | Appendix H |

NOTE: The Appendix H only photos of Field Strength of Spurious Radiation, no test data.

# 8 Measurement Uncertainty

For a 95% confidence level (k=2), the measurement expanded uncertainties for defined systems, in accordance with the recommendations of ISO 17025 as following:

| Test Item | | Extended Uncertainty |
|---|---|---|
| Transmitter Output Power | Power (dBm) | U =0.39 dB |
| Occupied Bandwidth | Magnitude (%) | U=0.2% |
| Band Edge Compliance | Disturbance Power (dBm) | U=2.0 dB |
| Conducted Spurious Emissions | Disturbance Power (dBm) | U=2.0 dB |
| Field Strength of Spurious Radiation | ERP (dBm) | U=4.6 dB (30 MHz – 1GHz)<br>U=3.0 dB (above 1 GHz) |
| Frequency Stability | Frequency Accuracy (ppm) | U=0.21 ppm |

----------The END----------