中国认可
国际互认
检测
TESTING
CNAS L0310

TESTING CERT #2174.01

FCC
RF Test Report

Product Name: Smart Phone

Model Number: HUAWEI CUN-L01,CUN-L01

Report No: SYBH(Z-RF)006012016-2002

FCC ID：QISCUN-L01

Reliability Laboratory of Huawei Technologies Co., Ltd.

Administration Building, Headquarters of Huawei Technologies Co., Ltd., Bantian, Longgang District, Shenzhen, 518129, P.R.C

Tel: +86 755 28780808 Fax: +86 755 89652518

Notice

1. The laboratory has Passed the accreditation by China National Accreditation Service for Conformity Assessment (CNAS). The accreditation number is L0310.

2. The laboratory has Passed the accreditation by The American Association for Laboratory Accreditation (A2LA). The accreditation number is 2174.01.

3. The laboratory has been listed by the US Federal Communications Commission to perform electromagnetic emission measurements. The site recognition number is 97456.

4. The laboratory has been listed by Industry Canada to perform electromagnetic emission measurements. The recognition numbers of test site are 6369A-1

5. The test report is invalid if not marked with the signatures of the persons responsible for preparing and approving the test report.

6. The test report is invalid if there is any evidence of erasure and/or falsification.

7. The test report is only valid for the test samples.

8. Content of the test report, in part or in full, cannot be used for publicity and/or promotional purposes without prior written approval from the laboratory.

9. The laboratory (Reliability Lab of Huawei Technologies Co., Ltd) is also named as “Global Compliance and Testing Center of Huawei Technologies Co., Ltd”, the both names have coexisted since 2009.

Huawei Proprietary and Confidential
Copyright © Huawei Technologies Co., Ltd.

Applicant:	Huawei Technologies Co., Ltd.
Address:	Administration Building, Headquarters of Huawei Technologies Co., Ltd., Bantian, Longgang District, Shenzhen, 518129, P.R.C

Date of Receipt Sample:	2016-01-14
Start Date of Test:	2016-01-25
End Date of Test:	2016-03-03

Test Result:	Pass

Approved by Senior Engineer:	2016-03-03	Liu Chunlin	Liu Chunlin
	Date	Name	Signature

Prepared by:	2016-03-03	maowenli	Maowenli
	Date	Name	Signature

Huawei Proprietary and Confidential
Copyright © Huawei Technologies Co., Ltd.

Modification Record

No.	Last Report No.	Modification Description
1		First Report

Huawei Proprietary and Confidential
Copyright © Huawei Technologies Co., Ltd.

CONTENT

1 General Information 6
1.1 Applied Standard 6
1.2 Test Location 6
1.3 Test Environment Condition 6
2 Test Summary 7
3 Description of the Equipment under Test (EUT) 8
3.1 General Description 8
3.2 EUT Identity 8
3.3 Technical Description 9
4 General Test Conditions / Configurations 10
4.1 Test Modes 10
4.2 EUT Configurations 10
4.3 Test Environments 11
4.4 Antenna requirements 11
4.5 Description of tests 12
4.6 Test Setups 14
4.7 Test Conditions 17
5 Main Test Instruments 19

Huawei Proprietary and Confidential
Copyright © Huawei Technologies Co., Ltd.

1 General Information

1.1 Applied Standard

Applied Rules:	47 CFR FCC Part 2, Subpart J 2014 47 CFR FCC Part 15, Subpart C 2014
Test Method:	FCC KDB 558074 D01 DTS Meas Guidance v03r02 ANSI C63.10-2013, American National Standard for Testing Unlicensed Wireless Devices.

1.2 Test Location

Test Location 1:	Reliability Laboratory of Huawei Technologies Co., Ltd.
Address:	Administration Building, Headquarters of Huawei Technologies Co., Ltd., Bantian, Longgang District, Shenzhen, 518129, P.R.C

1.3 Test Environment Condition

Ambient Temperature:	19.5to 25 °C
Ambient Relative Humidity:	40 to 55 %
Atmospheric Pressure:	Not applicable

Huawei Proprietary and Confidential
Copyright © Huawei Technologies Co., Ltd.

2 Test Summary

Test Item	FCC Part No.	Requirements	Test Result	Verdict
DTS (6 dB) Bandwidth	15.247(a)(2)	≥ 500 kHz.	Appendix A	Pass
Occupied Bandwidth	---	No limit	Appendix B	Pass
Duty Cycle	KDB 558074（6.0）	No limit	Appendix C	Pass
Maximum Conducted Average Output Power	15.247(b)(3)	For directional gain: < 30 dBm – (G[dBi] – 6 [dB]), Average; Otherwise: < 30 dBm, Average.	Appendix D	Pass
Maximum Power Spectral Density Level	15.247(e)	For directional gain: < 8 dBm/3 kHz – (G[dBi] – 6 [dB]), Average. Otherwise: < 8 dBm/3 kHz, Average.	Appendix E	Pass
Band Edges Compliance	15.247(d)	< -30 dBr/100 kHz if total average power ≤ power limit.	Appendix F	Pass
Unwanted Emissions into Non-Restricted Frequency Bands			Appendix G	Pass
Unwanted Emissions into Restricted Frequency Bands (Radiated)	15.247(d) 15.209 (NOTE 1)	FCC Part 15.209 field strength limit;	Appendix H	Pass
AC Power Line Conducted Emissions	15.207	FCC Part 15.207 conducted limit;	Appendix I	Pass

NOTE 1: According to KDB 558074, antenna-port conducted measurements are acceptable as an alternative to radiated measurements for demonstrating compliance to the limits in the restricted frequency bands. If conducted measurements are performed, then proper impedance matching must be ensured and an additional radiated test for cabinet/case emissions will also be required.

Huawei Proprietary and Confidential
Copyright © Huawei Technologies Co., Ltd.

3 Description of the Equipment under Test (EUT)

3.1 General Description

HUAWEI CUN-L01,CUN-L01 is subscriber equipment in the GSM/UMTS/LTE system.The GSM frequency band includes GSM850 and GSM900 and DCS1800 and PCS1900. The UMTS frequency band is band I and band VIII, The LTE frequency band is Band I and Band III and band VII and band VIII and band XX , The Mobile Phone implements such functions as RF signal receiving/transmitting, LTE/UMTS and GSM/GPRS/EDGE protocol processing, voice, video MMS service, GPS and Wi-Fi etc. Externally it provides micro SD card interface, earphone port (to provide voice service) and USIM card interface. It also provides Bluetooth module to synchronize data between a PC and the phone, or to use the built-in modem of the phone to access the Internet with a PC, or to exchange data with other Bluetooth devices.

NOTE:

Only 2.4G WLAN test data included in this report.

3.2 EUT Identity

NOTE: Unless otherwise noted in the report, the functional boards installed in the units shall be selected from the below list, but not means all the functional boards listed below shall be installed in one unit.

3.2.1 Board

Board		
Description	Hardware Version	Software Version
Main Board	Ver.A	CUN-L01C577B008

3.2.2 Sub- Assembly

Sub-Assembly			
Sub-Assembly Name	Model	Manufacturer	Description
Adapter	HW-050100U01	Huawei Technologies Co., Ltd.	Input Voltage: ~100-240V 50/60Hz Output Voltage: 5V ⎓ 1A
Adapter	HW-050100E01	Huawei Technologies Co., Ltd.	Input Voltage: ~100-240V 50/60Hz Output Voltage: 5V ⎓ 1A
Adapter	HW-050100B01	Huawei Technologies Co., Ltd.	Input Voltage: ~100-240V 50/60Hz Output Voltage: 5V ⎓ 1A
Adapter	HW-050100A01	Huawei Technologies Co., Ltd.	Input Voltage: ~100-240V 50/60Hz Output Voltage: 5V ⎓ 1A
Battery	HB4342A1RBC	Huawei Technologies Co., Ltd.	Rated capacity: 2200mAh Nominal Voltage: ⎓ +3.8V

Huawei Proprietary and Confidential
Copyright © Huawei Technologies Co., Ltd.

3.3 Technical Description

Characteristics	Description			
IEEE 802.11 WLAN Mode Supported	☒ 802.11b (20 MHz channel bandwidth), ☒ 802.11g (20 MHz channel bandwidth) ☒ 802.11n (20 MHz channel bandwidth), ☒ 802.11n (40 MHz channel bandwidth)			
TX/RX Operating Range	2412-2462 MHz band	fc = 2407 MHz + N * 5 MHz, where: - fc = "Operating Frequency" in MHz, - N = "Channel Number" with the range from 1 to 11 for the 20 MHz channel bandwidth, or 3 to 9 for the 40 MHz channel bandwidth.		
Data Rate	802.11b	1 Mbps, 2 Mbps, 5.5 Mbps, 11 Mbps		
	802.11g	6 Mbps, 9 Mbps, 12 Mbps, 18 Mbps, 24 Mbps, 36 Mbps, 48 Mbps, 54 Mbps		
	802.11n (SISO)	MCS 0 to MCS 7		
Modulation Type	DBPSK/DQPSK/CCK (DSSS), BPSK/QPSK/16QAM/64QAM (OFDM).			
Emission Designator	12M5G1D (for 802.11b mode), 16M4G7D (for 802.11g mod), 17M7G7D (for 802.11n20 mode) 36M1G7D (for 802.11n40 mode)			
TX Power Control	☐ Supported, ☒ Not Supported			
Standby Mode	☐ Supported, ☒ Not Supported			
Equipment Type	☐ Stand-alone equipment, ☐ Plug-in radio device, ☒ Combined equipment			
Antenna	Description	Isotropic Antenna		
	Type	☐ External, ☒ Integrated		
	Ports	☒ Ant 1, ☐ Ant 2, ☐ Ant 3		
	Smart System	☒ SISO (for 802.11b/g/n), ☐ MIMO (for 802.11n): 2 Tx & 2 Rx, ☐ Diversity (for 802.11b/g) : Tx & Rx		
	Gain	-0.87dBi (per antenna port, max.)		
	Remark	When the EUT is put into service, the practical maximum antenna gain should NOT exceed the value as described above.		
Power Supply	Type	☒ AC/DC Adapter	☐ PoE:	☐ Other:

Huawei Proprietary and Confidential
Copyright © Huawei Technologies Co., Ltd.

4 General Test Conditions / Configurations

4.1 Test Modes

NOTE: Worst cases for each IEEE 802.11 mode are selected to perform tests.

Test Mode	Test Modes Description
11B	IEEE 802.11b with data rate of 1 Mbps using SISO mode.
11G	IEEE 802.11g with data rate of 6 Mbps using SISO mode.
11N20	IEEE 802.11n with data date of MCS0 and bandwidth of 20 MHz using SISO mode.
11N40	IEEE 802.11n with data date of MCS0 and bandwidth of 40 MHz using SISO mode.

4.2 EUT Configurations

4.2.1 General Configurations

Configuration	Description
Test Antenna Ports	Until otherwise specified, - All TX tests are performed at all TX antenna ports of the EUT, and - All RX tests are performed at all RX antenna ports of the EUT.
Multiple RF Sources	Other than the tested RF source of the EUT, other RF source(s) are disabled or shutdown during measurements.

4.2.2 Customized Configurations

Test Mode	RF Ch.	TX Freq. [MHz]	Antenna Port	RX Freq. [MHz]	Ch. BW [MHz]	Power Conf., per Port	Duty cycle [%]
11B	L	Ch No. 1 / 2412 MHz	Ant1	---	20	15	97.4
	M	Ch No. 6 / 2437 MHz	Ant1	---	20	15	97.4
	H	Ch No. 11 / 2462 MHz	Ant1	---	20	15	97.4
11G	L	Ch No. 1 / 2412 MHz	Ant1	---	20	13	89
	M	Ch No. 6 / 2437 MHz	Ant1	---	20	13	89
	H	Ch No. 11 / 2462 MHz	Ant1	---	20	13	89
11N20	L	Ch No. 1 / 2412 MHz	Ant1	---	20	10	89
	M	Ch No. 6 / 2437 MHz	Ant1	---	20	10	89
	H	Ch No. 11 / 2462 MHz	Ant1	---	20	10	89
11N40	L	Ch No. 3 / 2422 MHz	Ant1	---	40	10	78.4
	M	Ch No. 6 / 2437 MHz	Ant1	---	40	10	78.4
	H	Ch No. 9 / 2452 MHz	Ant1	---	40	10	78.4

Huawei Proprietary and Confidential
Copyright © Huawei Technologies Co., Ltd.

4.3 Test Environments

NOTE: The values used in the test report may be stringent than the declared.

Environment Parameter	Selected Values During Tests		
	Temperature	Voltage	Relative Humidity
NTNV	Ambient	3.8 VDC	Ambient

4.4 Antenna requirements

Excerpt from §15.203 of the FCC Rules/Regulations:
"An intentional radiator antenna shall be designed to ensure that no antenna other than that furnished by the responsible party can be used with the device. The use of a permanently attached antenna or of an antenna that uses a unique coupling to the intentional radiator shall be considered sufficient to comply with the provisions of this section."

The antennas of the **HUAWEI CUN-L01, CUN-L01** are **permanently attached.**
There are no provisions for connection to an external antenna.

Conclusion:
The **EUT FCC ID: QISCUN-L01** unit complies with the requirement of §15.203.
Ch. Frequency (MHz)

Ch.	Frequency (MHz)
01	**2412**
. .	. .
06	**2437**
. .	. .
11	**2462**

Frequency/ Channel Operations

Huawei Proprietary and Confidential
Copyright © Huawei Technologies Co., Ltd.

4.5 Description of tests

4.5.1 Bandwidth measurement

(a) Connect EUT test port to spectrum analyzer.

(b) Set the EUT to transmit maximum output power at 2.4GHz, then set the measured frequency number and test the bandwidth with spectrum analyzer.

4.5.2 Average output power

(a) Connect EUT test port to spectrum analyzer.

(b) Set the EUT to transmit maximum output power at 2.4GHz.

(c) Then set the EUT to transmit at high, middle and low frequency and measure the conducted output power separately.

4.5.3 Band edge spurious emission

(a) Connect EUT test port to spectrum analyzer

(b) Set the EUT to transmit maximum output power at 2.4GHz.

(c) Then set the EUT to transmit at high, low frequency and measure the conducted band edge spurious separately.

4.5.4 Conducted RF spurious

(a) Connect EUT test port to spectrum analyzer

(b) Set the EUT to transmit maximum output power at 2.4GHz.

(c) Then set the EUT to transmit at high, middle and low frequency and measure the conducted spurious separately.

4.5.5 Power spectral density

(a) Connect EUT test port to spectrum analyzer

(b) Set the EUT to transmit maximum output power at 2.4GHz.

(c) Then set the EUT to transmit at high, middle and low frequency and measure the conducted power spectral density.

4.5.6 Radiated spurious emission & spurious in restricted band

The test site semi-anechoic chamber has met the requirement of NSA tolerance 4dB according to the standards: ANSI C63.10 (2013). The EUT was set-up on insulator 80cm above the Ground Plane. The set-up and test methods were according to ANSI C63.10:2013.The Radiated Disturbance measurements were made using a Rohde and Schwarz Test Receiver and control software.

A preliminary scan and a final scan of the emissions were made by using test script of software; the emissions were measured using a Quasi-Peak Detector below 1GHz, Peak Detector and AV Detector above 1GHz. The maximal emission value was acquired by adjusting the antenna height, polarisation and turntable azimuth in accordance with the software setup. Normally, the height range of antenna was 1m to 4m,and the azimuth range of turntable was 0°to 360°. The receive antenna has two polarizations V and H.

Huawei Proprietary and Confidential
Copyright © Huawei Technologies Co., Ltd.

A portable or small unlicensed wireless device shall be placed on a non-metallic test fixture or other nonmetallic support during testing. The supporting fixture shall permit orientation of the EUT in each of three orthogonal (x, y, z) axis positions such that emissions from the EUT are maximized.

The EUT communicates with the BTS simulator through Air interface. The EUT operated on the typical channel.

Measurement bandwidth: 30 MHz – 1000 MHz: 120 kHz
Measurement bandwidth: 1000 MHz – 10th Carrier Frequency: 1 MHz

4.5.7 Conducted Emission at Power Port

The Table-top EUT was placed upon a non-metallic table 0.8 m above the horizontal metal reference ground plane. EUT was connected to LISN and LISN was connected to reference Ground Plane. EUT was 80cm from LISN. The set-up and test methods were according to ANSI C63.10: 2013.

Conducted Disturbance at AC Port measurements were undertaken on the L and N Lines. The emissions were measured using a Quasi-Peak Detector and Average Detector.

The EUT communicates with the BTS simulator through Air interface, the BTS simulator controls the Wireless Modem to transmitter the maximum power which defined in specification of product. The Wireless Modem operated on the typical channel.

Measurement bandwidth (RBW) for 150kHz to 30 MHz: 9 kHz;

Huawei Proprietary and Confidential
Copyright © Huawei Technologies Co., Ltd.

4.6 Test Setups

4.6.1 Test Setup 1

The WLAN component's antenna ports(s) of the EUT are connected to the measurement instrument per an appropriate attenuator. The EUT is controlled by PC/software to emit the specified signals for the purpose of measurements.

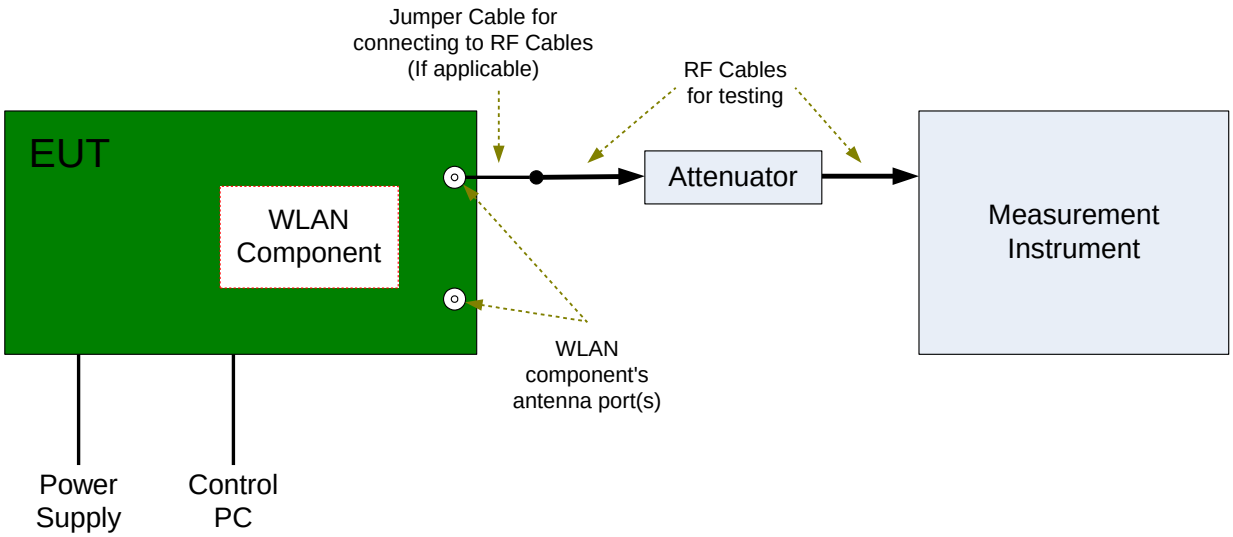

4.6.2 Test Setup 2

The test site semi-anechoic chamber has met the requirement of NSA tolerance 4 dB according to the standards: ANSI C63.4. The test distance is 3m.The setup is according to ANSI C63.4 and CAN/CSA-CEI/IEC CISPR 22.

The maximal emission value is acquired by adjusting the antenna height, polarisation and turntable azimuth. Normally, the height range of antenna is 1 m to 4 m, the azimuth range of turntable is 0° to 360°, and the receive antenna has two polarizations Vertical (V) and Horizontal (H).

Huawei Proprietary and Confidential
Copyright © Huawei Technologies Co., Ltd.

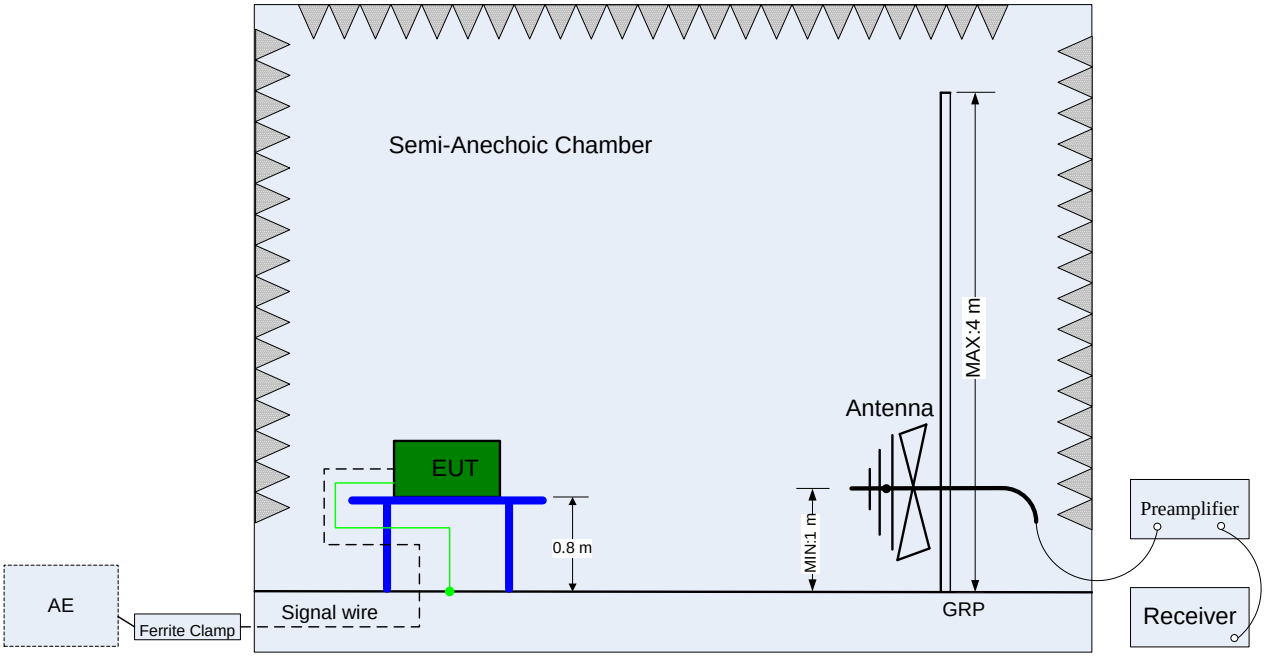

(Below 1 GHz)

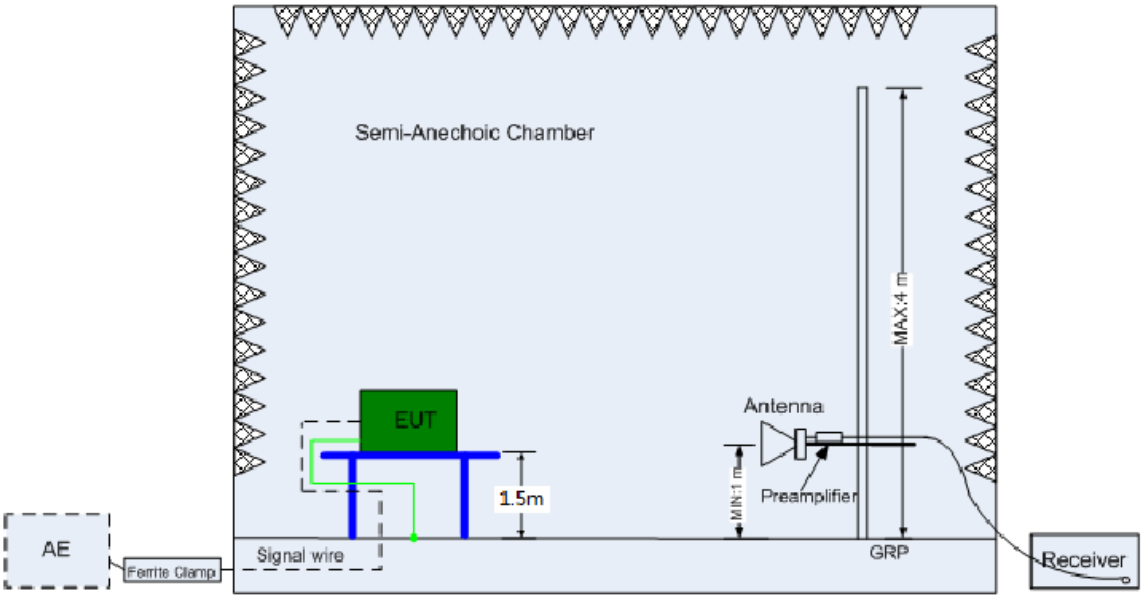

(Above 1 GHz)

Huawei Proprietary and Confidential
Copyright © Huawei Technologies Co., Ltd.

4.6.3 Test Setup 3

The mains cable of the EUT (maybe per AC/DC Adapter) must be connected to LISN. The LISN shall be placed 0.8 m from the boundary of EUT and bonded to a ground reference plane for LISN mounted on top of the ground reference plane. This distance is between the closest points of the LISN and the EUT. All other units of the EUT and associated equipment shall be at least 0.8m from the LISN.

Ground connections, where required for safety purposes, shall be connected to the reference ground point of the LISN and, where not otherwise provided or specified by the manufacturer, shall be of same length as the mains cable and run parallel to the mains connection at a separation distance of not more than 0.1 m.

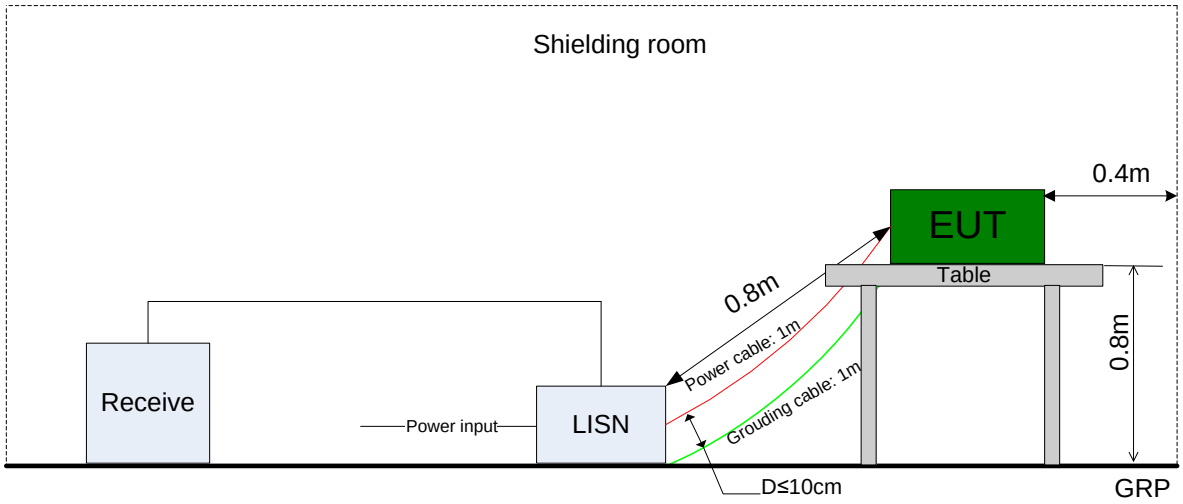

Huawei Proprietary and Confidential
Copyright © Huawei Technologies Co., Ltd.

4.7 Test Conditions

Test Case	Test Conditions	
	Configuration	Description
DTS (6 dB) Bandwidth	Measurement Method	FCC KDB 558074 §8.1 Option 2.
	Test Environment	NTNV
	Test Setup	Test Setup 1
	EUT Configuration	11B_L@Ant1, 11B_M@Ant1, 11B_H@Ant1, 11G_L@Ant1, 11G_M@Ant1, 11G_H@Ant1, 11N20_L@Ant1, 11N20_M@Ant1, 11N20_H@Ant1, 11N40_L@Ant1, 11N40_M@Ant1, 11N40_H@Ant1,
Occupied Bandwidth	Measurement Method	FCC KDB 558074 §8.2 Option 2.
	Test Environment	NTNV
	Test Setup	Test Setup 1
	EUT Configuration	11B_L@Ant1, 11B_M@Ant1, 11B_H@Ant1, 11G_L@Ant1, 11G_M@Ant1, 11G_H@Ant1, 11N20_L@Ant1, 11N20_M@Ant1, 11N20_H@Ant1, 11N40_L@Ant1, 11N40_M@Ant1, 11N40_H@Ant1,
Maximum Conducted Average Output Power	Measurement Method	FCC KDB 558074 §9.2 .2. 4
	Test Environment	NTNV
	Test Setup	Test Setup 1
	EUT Configuration	11B_L@Ant1, 11B_M@Ant1, 11B_H@Ant1, 11G_L@Ant1, 11G_M@Ant1, 11G_H@Ant1, 11N20_L@Ant1, 11N20_M@Ant1, 11N20_H@Ant1, 11N40_L@Ant1, 11N40_M@Ant1, 11N40_H@Ant1,
Maximum Power Spectral Density Level	Measurement Method	FCC KDB 558074§10.1 (peak PSD).
	Test Environment	NTNV
	Test Setup	Test Setup 1
	EUT Configuration	11B_L@Ant1, 11B_M@Ant1, 11B_H@Ant1, 11G_L@Ant1, 11G_M@Ant1, 11G_H@Ant1, 11N20_L@Ant1, 11N20_M@Ant1, 11N20_H@Ant1, 11N40_L@Ant1, 11N40_M@Ant1, 11N40_H@Ant1,
Band Edges Compliance	Measurement Method	FCC KDB 558074 §13.0.
	Test Environment	NTNV
	Test Setup	Test Setup 1
	EUT Configuration	11B_L@Ant1, 11B_M@Ant1, 11B_H@Ant1, 11G_L@Ant1, 11G_M@Ant1, 11G_H@Ant1, 11N20_L@Ant1, 11N20_M@Ant1, 11N20_H@Ant1, 11N40_L@Ant1, 11N40_M@Ant1, 11N40_H@Ant1,
Unwanted Emissions into Non-Restricted	Measurement Method	FCC KDB 558074 §11.0
	Test Environment	NTNV
	Test Setup	Test Setup 1

Huawei Proprietary and Confidential
Copyright © Huawei Technologies Co., Ltd.

Test Case	Test Conditions	
	Configuration	Description
Frequency Bands	EUT Configuration	11B_L@Ant1, 11B_M@Ant1, 11B_H@Ant1, 11G_L@Ant1, 11G_M@Ant1, 11G_H@Ant1, 11N20_L@Ant1, 11N20_M@Ant1, 11N20_H@Ant1, 11N40_L@Ant1, 11N40_M@Ant1, 11N40_H@Ant1,
Unwanted Emissions into Restricted Frequency Bands (Radiated)	Measurement Method	ANSI C63.10; FCC KDB 558074 §12.1, Radiated
	Test Environment	NTNV
	Test Setup	Test Setup 2
	EUT Placement	☐ Flatwise, ☐ Upright, ☐ Hung
	EUT Configuration	11B_L@Ant1, 11B_M@Ant1, 11B_H@Ant1, 11G_L@Ant1, 11G_M@Ant1, 11G_H@Ant1, 11N20_L@Ant1, 11N20_M@Ant1, 11N20_H@Ant1, 11N40_L@Ant1, 11N40_M@Ant1, 11N40_H@Ant1,
AC Power Line Conducted Emissions	Measurement Method	AC mains conducted.
	Test Environment	NTNV
	Test Setup	Test Setup 3
	EUT Configuration	11B_L@Ant1 (Worst Conf.).

Huawei Proprietary and Confidential
Copyright © Huawei Technologies Co., Ltd.

5 Main Test Instruments

Equipment Name	Manufacturer	Model	Serial Number	Cal Date	Cal- Due
Power supply	KEITHLEY	2303	1342889	2015-09-16	2017-09-15
Wireless Communication Test set	Agilent	N4010A	MY49081592	2015-10-30	2016-10-29
Universal Radio Communication Tester	R&S	CMU200	123299	2015-10-30	2016-10-29
Spectrum Analyzer	Agilent	N9020A	MY52090652	2015-07-08	2016-07-07
Universal Radio Communication Tester	R & S	CMW500	126854	2016-01-08	2017-01-07
Spectrum Analyzer	Agilent	E4440A	MY48250119	2015-07-08	2016-07-07
Signal Analyzer	R&S	FSQ31	200021	2015-10-30	2016-10-29
Spectrum Analyzer	Agilent	N9030A	MY49431698	2015-10-30	2016-10-29
Temperature Chamber	WEISS	WKL64	56246002940010	2016-01-21	2017-01-20
Signal generator	Agilent	E8257D	MY49281095	2015-10-30	2016-10-29
Vector Signal Generator	R&S	SMU200A	104162	2015-10-30	2016-10-29
Test receiver	R&S	ESU26	100387	2015-6-24	2016-06-23
Test receiver	R&S	ESCI	101163	2015-6-24	2016-06-23
Spectrum analyzer	R&S	FSU3	200474	2015-06-15	2016-06-14
Spectrum analyzer	R&S	FSU43	100144	2015-06-15	2016-06-14
LOOP Antennas(9kHz-30MHz)	R&S	HFH2-Z2	100262	2015-4-30	2017-4-29
LOOP Antennas(9kHz-30MHz)	R&S	HFH2-Z2	100263	2015-4-30	2017-4-29
Trilog Broadband Antenna (30M~3GHz)	SCHWARZBECK	VULB 9163	9163-490	2015-4-30	2017-4-29
Trilog Broadband Antenna (30M~3GHz)	SCHWARZBECK	VULB 9163	9163-520	2015-4-30	2017-4-29
Double-Ridged Waveguide Horn Antenna (1G~18GHz)	R&S	HF907	100304	2015-4-30	2017-4-29
double ridged horn antenna（0.8G-18GHz)	R&S	HF907	100305	2015-4-30	2017-4-29
Pyramidal Horn Antenna(18GHz-26.5GHz)	ETS-Lindgren	3160-09	5140299	2015-7-15	2017-7-14
Artificial Main Network	R&S	ENV4200	100134	2015-6-24	2016-6-23
Line Impedance Stabilization Network	R&S	ENV216	100382	2015-6-24	2016-6-23
Signal Generator	Agilent	E4438C	MY49071538	2015-03-10	2016-03-09
Power Detecting & Sampling Unit	R&S	OSP-B157	100914	2015-07-27	2016-07-26

Huawei Proprietary and Confidential
Copyright © Huawei Technologies Co., Ltd.