# RF Test Report

**Product Name:** **Wireless LAN Access Point**

**Product Model:** **AP6310SN-GN**

**Report Number:** **SYBH(R)002032012EB-4**

**FCC ID:** **QISAP6310SN-GN**

**IC ID:** **6369A-AP6310SN**


**Reliability Laboratory of Huawei Technologies Co., Ltd.**

Administration Building, Headquarters of Huawei Technologies Co., Ltd., Bantian, Longgang District, Shenzhen, 518129, P.R.C

Tel: +86 755 28780808 Fax: +86 755 89652518

# Notice

1. The laboratory has Passed the accreditation by China National Accreditation Service for Conformity Assessment (CNAS). The accreditation number is L0310.

2. The laboratory has Passed the accreditation by The American Association for Laboratory Accreditation (A2LA). The accreditation number is 2174.01.

3. The laboratory has been listed by the US Federal Communications Commission to perform electromagnetic emission measurements. The site recognition number is 97456.

4. The laboratory has been listed by Industry Canada to perform electromagnetic emission measurements. The recognition numbers of test site are 6369A-1 and 6369A-3.

5. The laboratory has been listed by the VCCI to perform EMC measurements. The accreditation numbers of test site No.1 are R-2364, G-415, C-2583, and T-256, and the accreditation numbers of test site No.2 are R-3760, G-485, C-4210 and T-1237.

6. The test report is invalid if not marked with the signatures of the persons responsible for preparing and approving the test report.

7. The test report is invalid if there is any evidence of erasure and/or falsification.

8. The test report is only valid for the test samples.

9. Content of the test report, in part or in full, cannot be used for publicity and/or promotional purposes without prior written approval from the laboratory.


Copyright © Huawei Technologies Co., Ltd.

| | |
|---|---|
| **Applicant:** | Huawei Technologies Co., Ltd. |
| **Address:** | Administration Building, Headquarters of Huawei Technologies Co., Ltd., Bantian, Longgang District, Shenzhen, 518129, P.R.C |
| **Product Name:** | Wireless LAN Access Point |
| **Product Model:** | AP6310SN-GN |
| **Version:** | V200R001 |

| | |
|---|---|
| **Date of Receipt Sample:** | 2012-03-19 |
| **Start Date of Test:** | 2012-03-19 |
| **End Date of Test:** | 2012-08-07 |

| | |
|---|---|
| **Test Result:** | Pass |

| | | | |
|---|---|---|---|
| **Approved by Senior Engineer:** | 2012-08-07 | Zhang Xinghai | Zhang Xing hai |
| | Date | Name | Signature |

| | | | |
|---|---|---|---|
| **Prepared by:** | 2012-08-07 | Zhang Weimin | Zhang Weim |
| | Date | Name | Signature |


Copyright © Huawei Technologies Co., Ltd.

## Modification Record

| No. | Last Report No. | Modification Description |
|---|---|---|
| --- | --- | --- |


Copyright © Huawei Technologies Co., Ltd.

## CONTENT

1 General Information ..... 6
1.1 Applied Standard ..... 6
1.2 Test Location ..... 6
1.3 Test Environment Condition ..... 6
2 Test Summary ..... 7
3 Description of the Equipment under Test (EUT) ..... 8
3.1 General Description ..... 8
3.2 EUT Identity ..... 8
3.3 Technical Description ..... 9
4 General Test Conditions / Configurations ..... 10
4.1 Declaration ..... 10
4.2 Test Modes ..... 11
4.3 EUT Configurations ..... 12
4.4 Test Environments ..... 13
4.5 Test Setups ..... 14
4.6 Test Conditions ..... 17
5 Test Requirements (FCC) ..... 20
5.1 DTS (6 dB) Bandwidth ..... 20
5.2 Maximum Peak Conducted Output Power ..... 20
5.3 Maximum Power Spectral Density Level ..... 20
5.4 Unwanted Emissions into Non-Restricted Frequency Bands ..... 20
5.5 Unwanted Emissions into Restricted Frequency Bands ..... 21
5.6 AC Power Line Conducted Emissions ..... 21
6 Test Requirements (IC) ..... 23
6.1 DTS (6 dB) Bandwidth ..... 23
6.2 99% Occupied Bandwidth ..... 23
6.3 Maximum Peak Conducted Output Power ..... 23
6.4 Maximum Power Spectral Density Level ..... 23
6.5 Unwanted Emissions into Non-Restricted Frequency Bands ..... 23
6.6 Unwanted Emissions into Restricted Frequency Bands ..... 24
6.7 Receiver Spurious Emissions ..... 25
6.8 AC Power Line Conducted Emissions ..... 25
7 Main Test Instruments ..... 26


Copyright © Huawei Technologies Co., Ltd.

# 1 General Information

## 1.1 Applied Standard

| | |
|---|---|
| Applied Rules: | 47 CFR FCC Part 2, Subpart J (10-1-11 Edition)<br>47 CFR FCC Part 15, Subpart C (10-1-11 Edition)<br><br>IC RSS-Gen (Issue 3, December 2010)<br>IC RSS-210 (Issue 8, December 2010) |
| Test Method: | FCC KDB 558074 D01 DTS Meas Guidance v01<br>FCC KDB 558074 DTS Meas Guidance DR01<br>FCC KDB 662911 D01 Multiple Transmitter Output v01 |

## 1.2 Test Location

| | |
|---|---|
| Test Location 1: | Reliability Laboratory of Huawei Technologies Co., Ltd. |
| Address: | Administration Building, Headquarters of Huawei Technologies Co., Ltd., Bantian, Longgang District, Shenzhen, 518129, P.R.C |

## 1.3 Test Environment Condition

| | |
|---|---|
| Ambient Temperature: | 19 to 26 °C |
| Ambient Relative Humidity: | 35 to 71 % |
| Atmospheric Pressure: | Not applicable |


Copyright © Huawei Technologies Co., Ltd.

## 2 Test Summary

| No. | Test Item | FCC Part No. | IC Standard No. | Test Result |
|---|---|---|---|---|
| 1 | DTS (6 dB) Bandwidth | 15.247(a)(2) | RSS-210, A8.2(a) | Appendix A.1 |
| 2 | 99% Occupied Bandwidth | --- | RSS-Gen, 4.6.1 | Appendix A.2 |
| 3 | Maximum Peak Conducted Output Power | 15.247(b)(3) | RSS-210, A8.4(4) | Appendix B |
| 4 | Maximum Power Spectral Density Level | 15.247(e) | RSS-210, A8.2(b) | Appendix C |
| 5 | Unwanted Emissions into Non-Restricted Frequency Bands | 15.247(d) | RSS-210, A8.5 | Appendix D |
| 6 | Unwanted Emissions into Restricted Frequency Bands (Conducted) | 15.247(d)<br>15.209<br>(NOTE) | RSS-210, A8.5<br>RSS-210, 2.2<br>RSS-Gen, 7.2.2<br>RSS-Gen, 7.2.5<br>(NOTE) | Appendix E.1 |
| 7 | Unwanted Emissions into Restricted Frequency Bands (Radiated) | | | Appendix E.2 |
| 8 | Receiver Spurious Emissions (Radiated, Only for IC requirement) | --- | RSS-210, 2.3<br>RSS-Gen, 6.1 | Appendix F |
| 9 | AC Power Line Conducted Emissions | 15.207 | RSS-Gen, 7.2.4 | Appendix G |
| 10 | Photos of Test Setups | --- | --- | Appendix H |

NOTE: According to FCC OET KDB 558074, the report use the antenna-port conducted measurements as an alternative to radiated measurements in the restricted frequency bands. In addition, the radiated test is also performed to ensure the emissions emanating from the device cabinet also comply with the applicable limits.


Copyright © Huawei Technologies Co., Ltd.

# 3 Description of the Equipment under Test (EUT)

## 3.1 General Description

The AP6310SN is a cost-efficient single-band AP that supports the 2.4 GHz frequency band and provides full power. It complies with IEEE 802.11a/b/g/n, and works as a Fit AP. The AP6310SN has the following advantages:

- High reliability
- High security
- Simple network deployment
- Automatic AC discovery and configuration
- Real-time management and maintenance

The AP6310SN is recommended on large-scale networks where users are distributed in a large area and an indoor distribution system is used, for example, office buildings, business buildings, hotels, airports, and bus stations. The AP6310SN APs provide indoor wireless signal coverage in these scenarios.

## 3.2 EUT Identity

NOTE: Unless otherwise noted in the report, the functional boards installed in the units shall be selected from the below list, but not means all the functional boards listed below shall be installed in one unit.

### 3.2.1 Board

| Board | | |
|---|---|---|
| Board Name | Hardware Version | Description |
| H86D2TS5L200 | VER.C | Main board |

### 3.2.2 Sub-Assembly

| Sub-Assembly | | | |
|---|---|---|---|
| Sub-Assembly Name | Model | Manufacturer | Description |
| --- | --- | --- | --- |


Copyright © Huawei Technologies Co., Ltd.

## 3.3 Technical Description

| Characteristics | Description | | | |
|---|---|---|---|---|
| IEEE 802.11 WLAN Mode Supported | ☒ 802.11b (20 MHz channel bandwidth), ☒ 802.11g (20 MHz channel bandwidth)<br>☒ 802.11n (20 MHz channel bandwidth), ☐ 802.11n (40 MHz channel bandwidth) | | | |
| Occupied Bandwidth | 13M8,16M3,17M5 | | | |
| Emission Designator | 13M8G1D,16M3G7D,17M5G7D | | | |
| TX/RX Operating Range | 2400-2483.5 MHz band | fc = 2407 MHz + N * 5 MHz, where:<br>- fc = “Operating Frequency” in MHz,<br>- N = “Channel Number” with the range from 1 to 11 for the 20 MHz channel bandwidth. | | |
| Data Rate | 802.11b | 1 Mbps, 2 Mbps, 5.5 Mbps, 11 Mbps | | |
| | 802.11g | 6 Mbps, 9 Mbps, 12 Mbps, 18 Mbps, 24 Mbps, 36 Mbps, 48 Mbps, 54 Mbps | | |
| | 802.11n (SISO) | MCS 0 to MCS 7 | | |
| | 802.11n (MIMO) | --- | | |
| Spectrum Scheme | Other than FHSS modulation (DSSS, OFDM) | | | |
| TX Power Control | ☒ Supported, ☐ Not Supported | | | |
| Standby Mode | ☐ Supported, ☒ Not Supported | | | |
| Equipment Type | ☐ Stand-alone equipment, ☐ Plug-in radio device, ☒ Combined equipment | | | |
| Antenna | Model/ID | 27010956 | | |
| | Description | Isotropic Antenna,2400~2500MHz/5150~5850MHz,3dBi/5dBi,isotropic,5W,N-J,no | | |
| | Type | ☒ External, ☐ Integrated | | |
| | Ports | ☒ Ant 1, ☐ Ant 2, ☐ Ant 3 | | |
| | Smart System | ☒ SISO (for 802.11b/g/n),<br>☐ MIMO (for 802.11n): Tx & Rx,<br>☐ Diversity (for 802.11b/g) : Tx & Rx | | |
| | Gain | 3 dBi (per antenna port, max.) | | |
| | Remark | When the EUT is put into service, the practical maximum antenna gain should NOT exceed the value as described above. | | |
| Power Supply | Type | ☒ AC/DC Adapter | ☒ PoE: | ☐ Other: |
| | Model/ID | 02220121 | Supplied by external source | --- |
| | Specification | ~100-240V; 50/60Hz; 0.8A | 48 VDC | --- |


Copyright © Huawei Technologies Co., Ltd.

# 4 General Test Conditions / Configurations

## 4.1 Declaration

### 4.1.1 Modular Approval

☒ Not applicable.

☐ The present document is based on the RF module installed within the product. The RF module was proved complying with relevant standard, see test report issued by _____ with report number _____ for the RF module with model number _____. The present document provides additive assessments and/or measurements to prove that the whole product still complies with relevant standard. The differences and modifications between the "alone RF module" (RF_org) and the "RF module integrated into the host/combination product" (RF_new) are declared by the applicant and showed as below:

- ---
- All other components of the RF_org are not changed.

### 4.1.2 Permissive Change

☒ Not applicable.

☐ The present document/product is based on another report/product as reference, both of which utilize the similar or identical radio design, shielding, interface, physical layout and so on. The referred test report was proved complying with relevant standard, see test report issued by _____ with report number _____ for the product with model number _____. The present document provides additive assessments and/or measurements, which are based on the referred test report, to prove the compliance with relevant standard. The differences and modifications between the referred test report/product (Product_ref) and the present test report/product (Product_cur) are declared by the applicant and showed as below:

- ---
- All other components of the Product_ref are not changed.

### 4.1.3 Multiple Models Applications

☐ The present document applies to single model number.

☒ The present document applies to several model numbers. The practical measurements are performed with the model number AP#2 (dummy code for secrecy consideration), and the differences between these model numbers are considered have no influence for tests in the present document. These model numbers utilize the similar radio design, shielding, interface, physical layout and so on. The differences and modifications between these model numbers are declared by the applicant and showed as below:

- The model number AP6310SN-GN in the present document is identical to AP#2, except that this model has the different external package.


Copyright © Huawei Technologies Co., Ltd.

## 4.2 Test Modes

NOTE: Typical working modes for each IEEE 802.11 mode are selected to perform tests.

| Test Mode | Test Modes Description |
|---|---|
| 11B/1 | IEEE 802.11b with data rate of 1 Mbps using SISO mode. |
| 11G/6 | IEEE 802.11g with data rate of 6 Mbps using SISO mode. |
| 11N20/0 | IEEE 802.11n with data date of MCS0 and bandwidth of 20 MHz using SISO mode. |
| 11x_RX | Continues Receiving mode (if supported). |


Copyright © Huawei Technologies Co., Ltd.

## 4.3 EUT Configurations

### 4.3.1 General Configurations

| Configuration | Description |
|---|---|
| Test Antenna Ports | Until otherwise specified,<br>- All TX tests are performed at all TX antenna ports of the EUT, and<br>- All RX tests are performed at all RX antenna ports of the EUT. |
| Multiple RF Sources | Other than the tested RF source of the EUT, other RF source(s) are disabled or shutdown during measurements. |

### 4.3.2 Customized Configurations

| # EUT Conf. | Test Mode | RF Ch. | Antenna Port | TX Freq. [MHz] | RX Freq. [MHz] | Ch. BW [MHz] | Power Level Conf., per Port | Duty Cycle |
|---|---|---|---|---|---|---|---|---|
| 11B/1_B@1 | 11B/1 | B | Ant 1 | Ch No. 1 / 2412 MHz | --- | 20 | 15 | 1.00 |
| 11B/1_M@1 | 11B/1 | M | Ant 1 | Ch No. 6 / 2437 MHz | --- | 20 | 15 | 1.00 |
| 11B/1_T@1 | 11B/1 | T | Ant 1 | Ch No. 11 / 2462 MHz | --- | 20 | 15 | 1.00 |
| 11G/6_B@1 | 11G/6 | B | Ant 1 | Ch No. 1 / 2412 MHz | --- | 20 | 15 | 1.00 |
| 11G/6_M@1 | 11G/6 | M | Ant 1 | Ch No. 6 / 2437 MHz | --- | 20 | 15 | 1.00 |
| 11G/6_T@1 | 11G/6 | T | Ant 1 | Ch No. 11 / 2462 MHz | --- | 20 | 15 | 1.00 |
| 11N20/0_B@1 | 11N20/0 | B | Ant 1 | Ch No. 1 / 2412 MHz | --- | 20 | 15 | 1.00 |
| 11N20/0_M@1 | 11N20/0 | M | Ant 1 | Ch No. 6 / 2437 MHz | --- | 20 | 15 | 1.00 |
| 11N20/0_T@1 | 11N20/0 | T | Ant 1 | Ch No. 11 / 2462 MHz | --- | 20 | 15 | 1.00 |
| 11x/RX | 11x/RX | --- | Ant 1 + Ant 2 | --- | --- | --- | --- | --- |


Copyright © Huawei Technologies Co., Ltd.

## 4.4 Test Environments

NOTE: The values used in the test report may be stringent than the declared.

| Environment Parameter | Selected Values During Tests | | |
|---|---|---|---|
| | Temperature | Voltage | Relative Humidity |
| NTNV | Ambient | PoE, 48 VDC<br>Adapter, 120 VAC | Ambient |


Copyright © Huawei Technologies Co., Ltd.

## 4.5 Test Setups

### 4.5.1 Test Setup 1

The WLAN component's antenna ports(s) of the EUT are connected to the measurement instrument per an appropriate attenuator. The EUT is controlled by PC/software to emit the specified signals for the purpose of measurements.

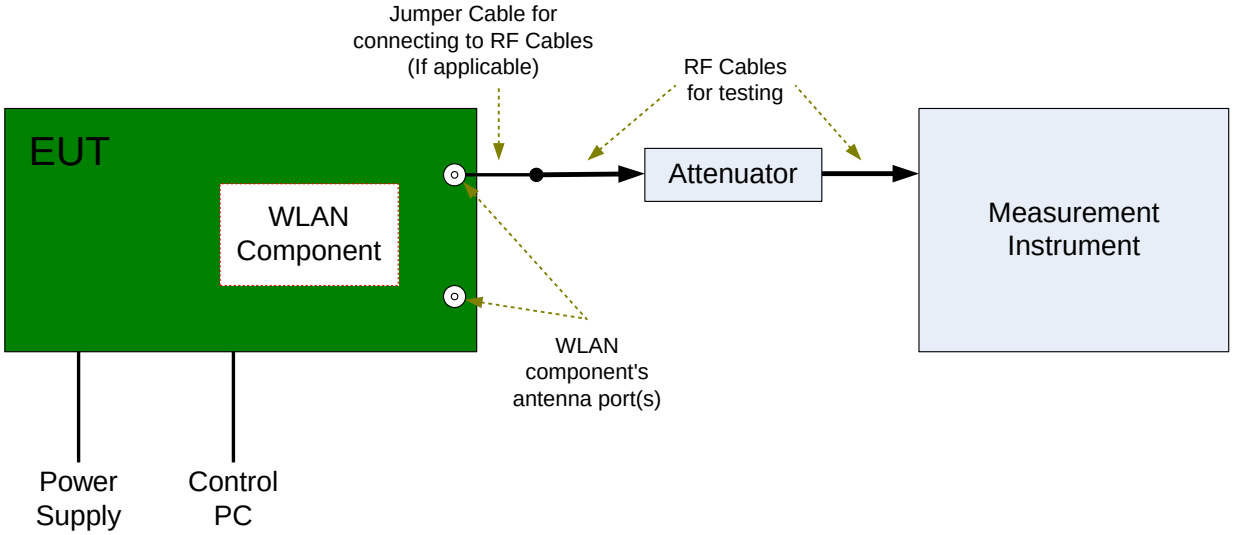


### 4.5.2 Test Setup 2

The test site semi-anechoic chamber has met the requirement of NSA tolerance 4 dB according to the standards: ANSI C63.4. The test distance is 3m.The setup is according to ANSI C63.4 and CAN/CSA-CEI/IEC CISPR 22.

The maximal emission value is acquired by adjusting the antenna height, polarisation and turntable azimuth. Normally, the height range of antenna is 1 m to 4 m, the azimuth range of turntable is 0° to 360°, and the receive antenna has two polarizations Vertical (V) and Horizontal (H).


Copyright © Huawei Technologies Co., Ltd.

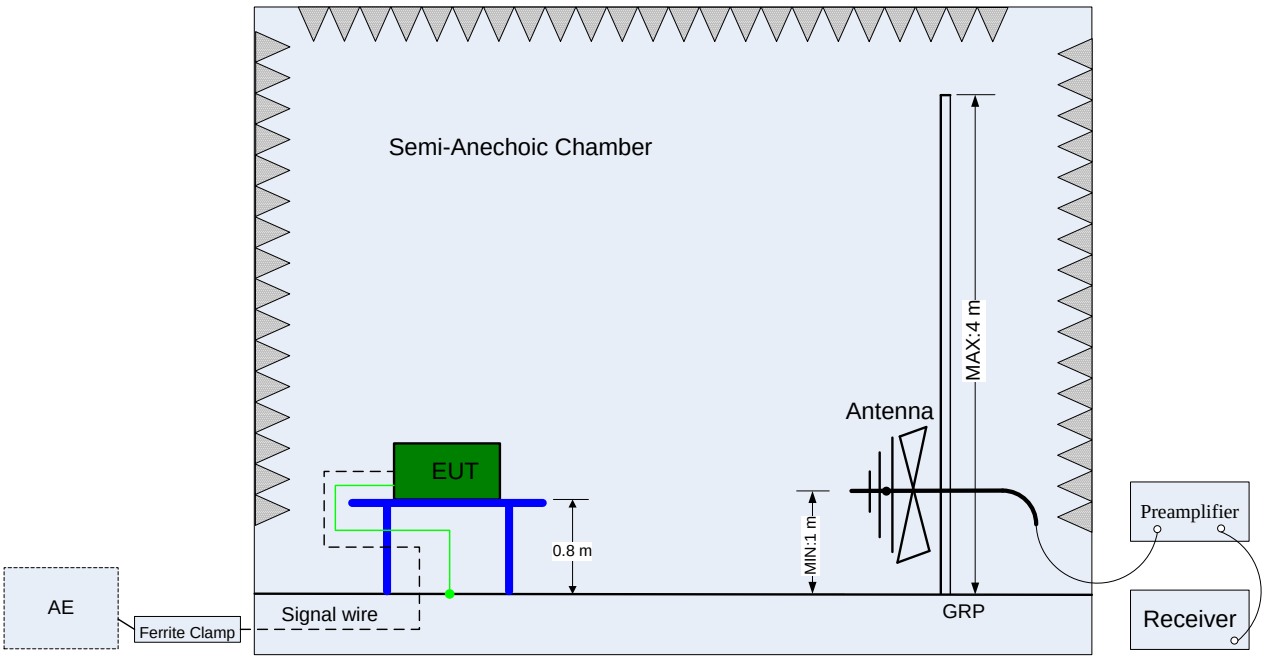


(Below 1 GHz)

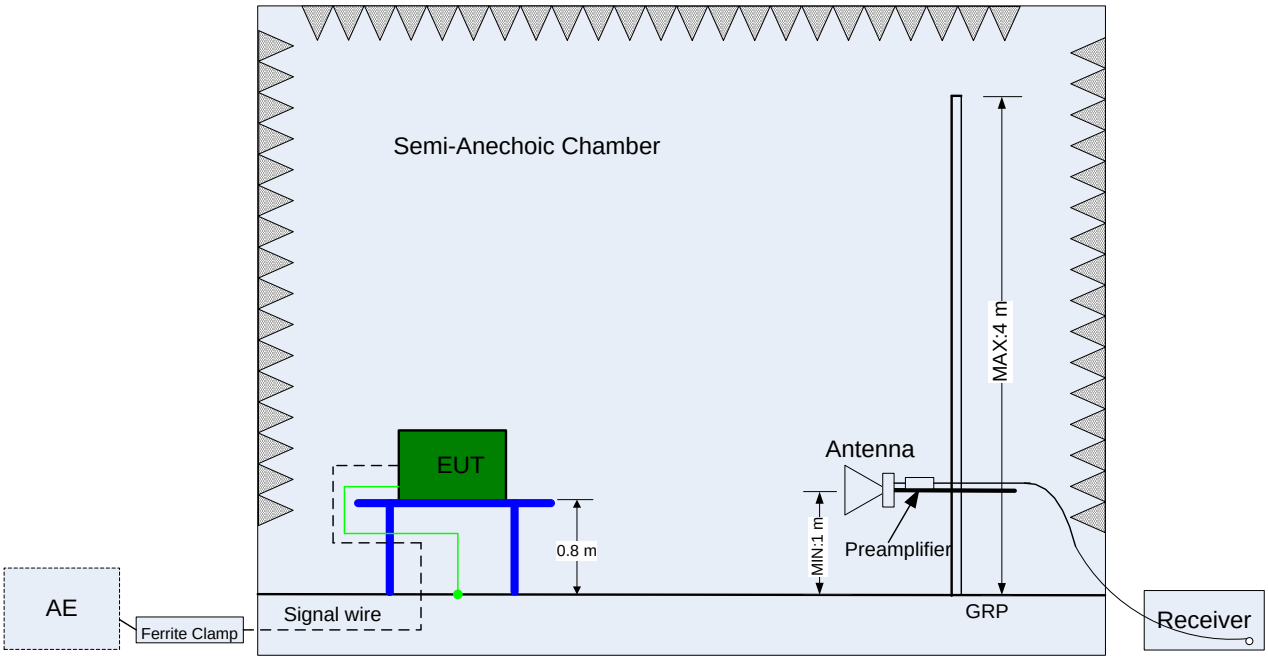


(Above 1 GHz)


Copyright © Huawei Technologies Co., Ltd.

### 4.5.3 Test Setup 3

The mains cable of the EUT (maybe per AC/DC Adapter) must be connected to LISN. The LISN shall be placed 0.8 m from the boundary of EUT and bonded to a ground reference plane for LISN mounted on top of the ground reference plane. This distance is between the closest points of the LISN and the EUT. All other units of the EUT and associated equipment shall be at least 0.8m from the LISN.

Ground connections, where required for safety purposes, shall be connected to the reference ground point of the LISN and, where not otherwise provided or specified by the manufacturer, shall be of same length as the mains cable and run parallel to the mains connection at a separation distance of not more than 0.1 m.

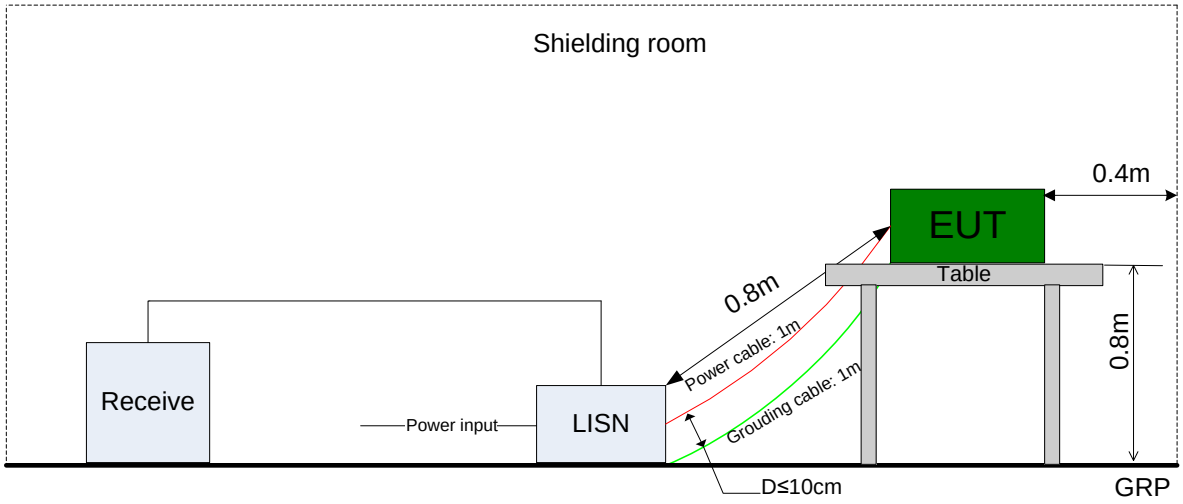



Copyright © Huawei Technologies Co., Ltd.

## 4.6 Test Conditions

| Test Case | Test Conditions | |
|---|---|---|
| | Configuration | Description |
| DTS (6 dB) Bandwidth | Meas. Method | FCC KDB 558074 §7.1.1 Option 1. |
| | Test Env. | NTNV |
| | Test Setup | Test Setup 1 |
| | EUT Conf. | 11B/1_B@1, 11B/1_M@1, 11B/1_T@1,<br>11G/6_B@1, 11G/6_M@1, 11G/6_T@1,<br>11N20/0_B@1, 11N20/0_M@1, 11N20/0_T@1. |
| 99% Occupied Bandwidth | Meas. Method | RSS-Gen, 4.6.1 |
| | Test Env. | NTNV |
| | Test Setup | Test Setup 1 |
| | EUT Conf. | 11B/1_B@1, 11B/1_M@1, 11B/1_T@1,<br>11G/6_B@1, 11G/6_M@1, 11G/6_T@1,<br>11N20/0_B@1, 11N20/0_M@1, 11N20/0_T@1, |
| Maximum Peak Conducted Output Power | Meas. Method | FCC KDB 558074 §7.2.1.2 Option 2 (integrated band power method). |
| | Test Env. | NTNV |
| | Test Setup | Test Setup 1 |
| | EUT Conf. | 11B/1_B@1, 11B/1_M@1, 11B/1_T@1,<br>11G/6_B@1, 11G/6_M@1, 11G/6_T@1,<br>11N20/0_B@1, 11N20/0_M@1, 11N20/0_T@1. |
| Maximum Power Spectral Density Level | Meas. Method | FCC KDB 558074 §7.3.1 Option 1 (peak PSD). |
| | Test Env. | NTNV |
| | Test Setup | Test Setup 1 |
| | EUT Conf. | 11B/1_B@1, 11B/1_M@1, 11B/1_T@1,<br>11G/6_B@1, 11G/6_M@1, 11G/6_T@1,<br>11N20/0_B@1, 11N20/0_M@1, 11N20/0_T@1. |
| Unwanted Emissions into Non-Restricted Frequency Bands | Meas. Method | FCC KDB 558074 §7.4.1, use Peak PSD. |
| | Test Env. | NTNV |
| | Test Setup | Test Setup 1 |
| | EUT Conf. | 11B/1_B@1, 11B/1_M@1, 11B/1_T@1,<br>11G/6_B@1, 11G/6_M@1, 11G/6_T@1, |


Copyright © Huawei Technologies Co., Ltd.

| Test Case | Test Conditions | |
|---|---|---|
| | Configuration | Description |
| | | 11N20/0_B@1, 11N20/0_M@1, 11N20/0_T@1. |
| Unwanted Emissions into Restricted Frequency Bands (Conducted) | Meas. Method | FCC KDB 558074 §7.4.2, Conducted (antenna-port). |
| | Test Env. | NTNV |
| | Test Setup | Test Setup 1 |
| | EUT Conf. | 11B/1_B@1, 11B/1_M@1, 11B/1_T@1,<br><br>11G/6_B@1, 11G/6_M@1, 11G/6_T@1,<br><br>11N20/0_B@1, 11N20/0_M@1, 11N20/0_T@1. |
| Unwanted Emissions into Restricted Frequency Bands (Radiated) | Meas. Method | FCC KDB 558074 §7.4.2, Radiated (cabinet/case emissions with impedance matching for antenna-port). |
| | Test Env. | NTNV |
| | Test Setup | Test Setup 2 |
| | EUT Placement | ☒ Flatwise, ☐ Upright, ☐ Hung |
| | EUT Conf. | (1) 30 MHz to 1 GHz:<br>Worst Case (11B/1_B@1).<br><br>(2) 1 GHz to 3 GHz:<br>11B/1_B@1, 11B/1_T@1,<br>11G/6_B@1, 11G/6_T@1,<br>11N20/0_B@1, 11N20/0_T@1.<br><br>(3) 3 GHz to 18 GHz:<br>Worst Case (11B/1_B@1).<br><br>(4) 18 GHz to 26.5 GHz:<br>Worst Case (11B/1_B@1).<br><br>NOTE: The configurations with higher or highest power spectral density level are mainly considered. |
| Receiver Spurious Emissions (Radiated, Only for IC requirement) | Meas. Method | Radiated. |
| | Test Env. | NTNV |
| | Test Setup | Test Setup 2 |
| | EUT Placement | ☒ Flatwise, ☐ Upright, ☐ Hung |
| | EUT Conf. | 11x_RX |
| AC Power Line Conducted Emissions | Meas. Method | AC mains conducted. |
| | Test Env. | NTNV |
| | Test Setup | Test Setup 3 |
| | EUT Conf. | 11B/1_M@1. |


Copyright © Huawei Technologies Co., Ltd.

Huawei Proprietary and Confidential
Copyright © Huawei Technologies Co., Ltd.

# 5 Test Requirements (FCC)

## 5.1 DTS (6 dB) Bandwidth

According to FCC Part 15.247(a)(2):
Systems using digital modulation techniques may operate in the 902 - 928 MHz, 2400 - 2483.5 MHz, and 5725 - 5850 MHz bands. The minimum 6 dB bandwidth shall be at least 500 kHz.

## 5.2 Maximum Peak Conducted Output Power

According to FCC Part 15.247(b)(3):
The maximum peak conducted output power of the intentional radiator for systems using digital modulation in the 902 - 928 MHz, 2400 - 2483.5 MHz, and 5725 - 5850 MHz bands shall not exceed: 1 Watt. As an alternative to a peak power measurement, compliance with the one Watt limit can be based on a measurement of the maximum conducted output power. Maximum Conducted Output Power is defined as the total transmit power delivered to all antennas and antenna elements averaged across all symbols in the signaling alphabet when the transmitter is operating at its maximum power control level. Power must be summed across all antennas and antenna elements. The average must not include any time intervals during which the transmitter is off or is transmitting at a reduced power level. If multiple modes of operation are possible (e.g., alternative modulation methods), the maximum conducted output power is the highest total transmit power occurring in any mode.

According to FCC Part 15.247(b)(4):
Conducted output power limit specified in paragraph (b) of this section is based on the use of antennas with directional gains that do not exceed 6 dBi. If transmitting antennas of directional gain greater than 6 dBi are used, the conducted output power from the intentional radiator shall be reduced below the stated values in paragraphs (b)(3) of this section, as appropriate, by the amount in dB that the directional gain of the antenna exceeds 6 dBi.

## 5.3 Maximum Power Spectral Density Level

According to FCC Part 15.247(e):
For digitally modulated systems, the power spectral density conducted from the intentional radiator to the antenna shall not be greater than 8 dBm in any 3 kHz band during any time interval of continuous transmission. This power spectral density shall be determined in accordance with the provisions of paragraph (b) of this section. The same method of determining the conducted output power shall be used to determine the power spectral density.

## 5.4 Unwanted Emissions into Non-Restricted Frequency Bands

According to FCC Part 15.247(d):
In any 100 kHz bandwidth outside the frequency band in which the spread spectrum or digitally modulated intentional radiator is operating, the radio frequency power that is produced by the intentional radiator shall be at least 20 dB below that in the 100 kHz bandwidth within the band that contains the highest level of the desired power, based on either an RF conducted or a radiated measurement, provided the transmitter demonstrates compliance with the peak conducted power limits. If the transmitter complies with the conducted power limits based on the use of RMS averaging


Copyright © Huawei Technologies Co., Ltd.

over a time interval, as permitted under paragraph (b)(3) of this section, the attenuation required under this paragraph shall be 30 dB instead of 20 dB.

## 5.5 Unwanted Emissions into Restricted Frequency Bands

According to FCC Part 15.247(d):
Attenuation below the general limits specified in Section 15.209(a) is not required. In addition, radiated emissions which fall in the restricted bands, as defined in Section 15.205(a), also should comply with the radiated emission limits specified in Section 15.209(a).

According to FCC Part 15.209 and relevant rules:
The emissions from an intentional radiator shall not exceed the field strength levels specified in the following table:

| Frequency (MHz) | Field Strength (μV/m) | Field Strength (dBμV/m) | Measurement Distance (m) (Note 2) | Detector (Note 1) |
|---|---|---|---|---|
| 0.009 – 0.090 | 2400/F(kHz) | 20*lg(2400/F(kHz)) | 300 | Average |
| 0.090 – 0.110 | 2400/F(kHz) | 20*lg(2400/F(kHz)) | 300 | CISPR Quasi-peak |
| 0.110 – 0.490 | 2400/F(kHz) | 20*lg(2400/F(kHz)) | 300 | Average |
| 0.490 – 1.705 | 24000/F(kHz) | 20*lg(24000/F(kHz)) | 30 | CISPR Quasi-peak |
| 1.705 – 30.0 | 30 | 29.5 | 30 | CISPR Quasi-peak |
| 30 – 88 | 100 | 40 | 3 | CISPR Quasi-peak |
| 88 – 216 | 150 | 43.5 | 3 | CISPR Quasi-peak |
| 216 – 960 | 200 | 46 | 3 | CISPR Quasi-peak |
| 960 –1000 | 500 | 54 | 3 | CISPR Quasi-peak |
| Above 1000 (Note 2) | 500 | 54 | 3 | Average |
| Above 1000 (Note 2) | --- | 74 | 3 | Peak |
| Note 1: See detailed in FCC Part 15.209(d).<br>Note 2: See detailed in FCC Part 15.209(e)(f) for measurement distance, frequency range and so on. | | | | |

## 5.6 AC Power Line Conducted Emissions

According to FCC Part 15.207 and relevant rules:
For an intentional radiator that is designed to be connected to the public utility (AC) power line, the radio frequency voltage that is conducted back onto the AC power line on any frequency or frequencies, within the band 150 kHz to 30 MHz, shall not exceed the limits in the following table, as measured using a 50 μH/50 ohms line impedance stabilization network (LISN). Compliance with the provisions of this paragraph shall be based on the measurement of the radio frequency voltage between each power line and ground at the power terminal. The lower limit applies at the boundary between the frequency ranges.

| Frequency of Emission (MHz) | Conducted Limit (dBμV) | |
|---|---|---|
| | Quasi-peak | Average |
| 0.15 – 0.5 | 66 to 56 * | 56 to 46 * |


Copyright © Huawei Technologies Co., Ltd.

| Frequency of Emission (MHz) | Conducted Limit (dBµV) | |
|---|---|---|
| | Quasi-peak | Average |
| 0.5 – 5 | 56 | 46 |
| 5 – 30 | 60 | 50 |
| * Decreases with the logarithm of the frequency. | | |


Copyright © Huawei Technologies Co., Ltd.

# 6 Test Requirements (IC)

## 6.1 DTS (6 dB) Bandwidth

According to RSS-210 A8.2(a):
The minimum -6 dB bandwidth shall be at least 500 kHz.

## 6.2 99% Occupied Bandwidth

The transmitter shall be operated at its maximum carrier power measured under normal test conditions. The span of the analyzer shall be set to capture all products of the modulation process, including the emission skirts. The resolution bandwidth shall be set to as close to 1% of the selected span as is possible without being below 1%. The video bandwidth shall be set to 3 times the resolution bandwidth. Video averaging is not permitted. Where practical, a sampling detector shall be used given that a peak or peak hold may produce a wider bandwidth than actual.

The trace data points are recovered and directly summed in linear terms. The recovered amplitude data points, beginning at the lowest frequency, are placed in a running sum until 0.5% of the total is reached and that frequency recorded. The process is repeated for the highest frequency data points. This frequency is recorded. The span between the two recorded frequencies is the occupied bandwidth.

## 6.3 Maximum Peak Conducted Output Power

According to RSS-210 A8.4(4):
For systems employing digital modulation techniques operating in the bands 902-928 MHz, 2400-2483.5 MHz and 5725-5850 MHz, the maximum peak conducted output power shall not exceed 1 W. As an alternative to a peak power measurement, compliance can be based on a measurement of the maximum conducted output power. The maximum conducted output power is the total transmit power delivered to all antennas and antenna elements, averaged across all symbols in the signalling alphabet when the transmitter is operating at its maximum power control level. Power must be summed across all antennas and antenna elements. The average must not include any time intervals during which the transmitter is off or transmitting at a reduced power level. If multiple modes of operation are implemented, the maximum conducted output power is the highest total transmit power occurring in any mode.

## 6.4 Maximum Power Spectral Density Level

According to RSS-210 A8.2(b):
The transmitter power spectral density conducted from the transmitter to the antenna shall not be greater than 8 dBm in any 3 kHz band during any time interval of continuous transmission. This power spectral density shall be determined in accordance with the provisions of Section A8.4 (4), (i.e. the power spectral density shall be determined using the same method as is used to determine the conducted output power).

## 6.5 Unwanted Emissions into Non-Restricted Frequency Bands

According to RSS-210 A8.5:


Copyright © Huawei Technologies Co., Ltd.

In any 100 kHz bandwidth outside the frequency band in which the spread spectrum or digitally modulated device is operating, the RF power that is produced shall be at least 20 dB below that in the 100 kHz bandwidth within the band that contains the highest level of the desired power, based on either an RF conducted or a radiated measurement, provided that the transmitter demonstrates compliance with the peak conducted power limits. If the transmitter complies with the conducted power limits based on the use of root-mean-square averaging over a time interval, as permitted under Section A8.4 (4), the attenuation required shall be 30 dB instead of 20 dB.

## 6.6 Unwanted Emissions into Restricted Frequency Bands

According to RSS-210 A8.5:
Attenuation below the general field strength limits specified in RSS-Gen is not required.

According to RSS-210 2.2:
Category I licence-exempt equipment is required to comply with the provisions in RSS-Gen with respect to emissions falling within restricted frequency bands. These restricted frequency bands are listed in RSS-Gen.

According to RSS-Gen 7.2.2:
Restricted bands, identified in Table 3 of RSS-Gen, are designated primarily for safety-of-life services (distress calling and certain aeronautical bands), certain satellite downlinks, radio astronomy and some government uses. Except where otherwise indicated, the following restrictions apply: (a) fundamental components of modulation of licence-exempt radio apparatus shall not fall within the restricted bands of Table 3 of RSS-Gen; (b) unwanted emissions falling into restricted bands of Table 3 of RSS-Gen shall comply with the limits specified in RSS-Gen; (c) unwanted emissions not falling within restricted frequency bands shall either comply with the limits specified in the applicable RSS, or with those specified in RSS-Gen.

According to RSS-Gen 7.2.5:
Spurious emissions from licence-exempt transmitters shall comply with the field strength limits shown below. Additionally, the level of any transmitter spurious emission shall not exceed the level of the transmitter's fundamental emission.

| Frequency (MHz) | Field Strength (μV/m) | Magnetic H-Field (μA/m) | Measurement Distance (m) | Detector |
|---|---|---|---|---|
| 0.009 – 0.090 | 2400/F(kHz) | 2400/377F(kHz) | 300 | Average |
| 0.090 – 0.110 | 2400/F(kHz) | 2400/377F(kHz) | 300 | Quasi-peak |
| 0.110 – 0.490 | 2400/F(kHz) | 2400/377F(kHz) | 300 | Average |
| 0.490 – 1.705 | 24000/F(kHz) | 24000/377F(kHz) | 30 | Quasi-peak |
| 1.705 – 30.0 | 30 | --- | 30 | Quasi-peak |

| Frequency (MHz) | Field Strength (μV/m) | Field Strength (dBμV/m) | Measurement Distance (m) | Detector |
|---|---|---|---|---|
| 30 – 88 | 100 | 40 | 3 | Quasi-peak |
| 88 – 216 | 150 | 43.5 | 3 | Quasi-peak |
| 216 – 960 | 200 | 46 | 3 | Quasi-peak |


Copyright © Huawei Technologies Co., Ltd.

| Frequency (MHz) | Field Strength (μV/m) | Field Strength (dBμV/m) | Measurement Distance (m) | Detector |
|---|---|---|---|---|
| 960 –1000 | 500 | 54 | 3 | Quasi-peak |
| Above 1000 | 500 | 54 | 3 | Average |

## 6.7 Receiver Spurious Emissions

According to RSS-210 2.3:
Category I equipment receivers for use with transmitters subject to RSS-210 must comply with the applicable requirements set out in RSS-Gen and be certified under RSS-210.

According to RSS-Gen 6.1:
Spurious emissions from receivers shall not exceed the radiated limits shown in the table below.

| Frequency (MHz) | Field Strength (μV/m) | Field Strength (dBμV/m) | Measurement Distance (m) | Detector |
|---|---|---|---|---|
| 30 – 88 | 100 | 40 | 3 | Quasi-peak |
| 88 – 216 | 150 | 43.5 | 3 | Quasi-peak |
| 216 – 960 | 200 | 46 | 3 | Quasi-peak |
| 960 –1000 | 500 | 54 | 3 | Quasi-peak |
| Above 1000 | 500 | 54 | 3 | Average |

## 6.8 AC Power Line Conducted Emissions

According to RSS-Gen 7.2.4 and relevant rules:
Except when the requirements applicable to a given device state otherwise, for any radio apparatus equipped to operate from the public utility AC power supply, either directly or indirectly (such as with a battery charger), the radio frequency voltage of emissions conducted back onto the AC power lines in the frequency range of 0.15 MHz to 30 MHz shall not exceed the limits shown in the table below. The more stringent limit applies at the frequency range boundaries. The conducted emissions shall be measured with a 50 ohm/50 microhenry line impedance stabilization network (LISN).

| Frequency of Emission (MHz) | Conducted Limit (dBμV) | |
|---|---|---|
| | Quasi-peak | Average |
| 0.15 – 0.5 | 66 to 56 * | 56 to 46 * |
| 0.5 – 5 | 56 | 46 |
| 5 – 30 | 60 | 50 |
| * Decreases with the logarithm of the frequency. | | |


Copyright © Huawei Technologies Co., Ltd.

## 7 Main Test Instruments

| Equipment Name | Manufacturer | Model | Serial Number | Cal. Due |
|---|---|---|---|---|
| Test Setup 1 | | | | |
| Spectrum Analyzer | Agilent | E4440A | MY49420179 | 2013-05-13 |
| Test Setup 2 | | | | |
| EMI Test Receiver | R&S | ESU40 | 100144 | 2013-05-13 |
| Bilog Antenna | Schaffner | CBL 6112B | 2536 | 2013-01-12 |
| Horn Antenna | R&S | HF906 | 359287/005 | 2014-3-23 |
| Horn Antenna | ETS | 3160-9 | 053215-21876 | 2013-2-1 |
| Test Setup 3 | | | | |
| EMI Test Receiver | R&S | ESCI | 100929 | 2013-05-13 |
| Artificial Mains Network | R&S | ENV4200 | 100046 | 2013-05-13 |

END


Copyright © Huawei Technologies Co., Ltd.