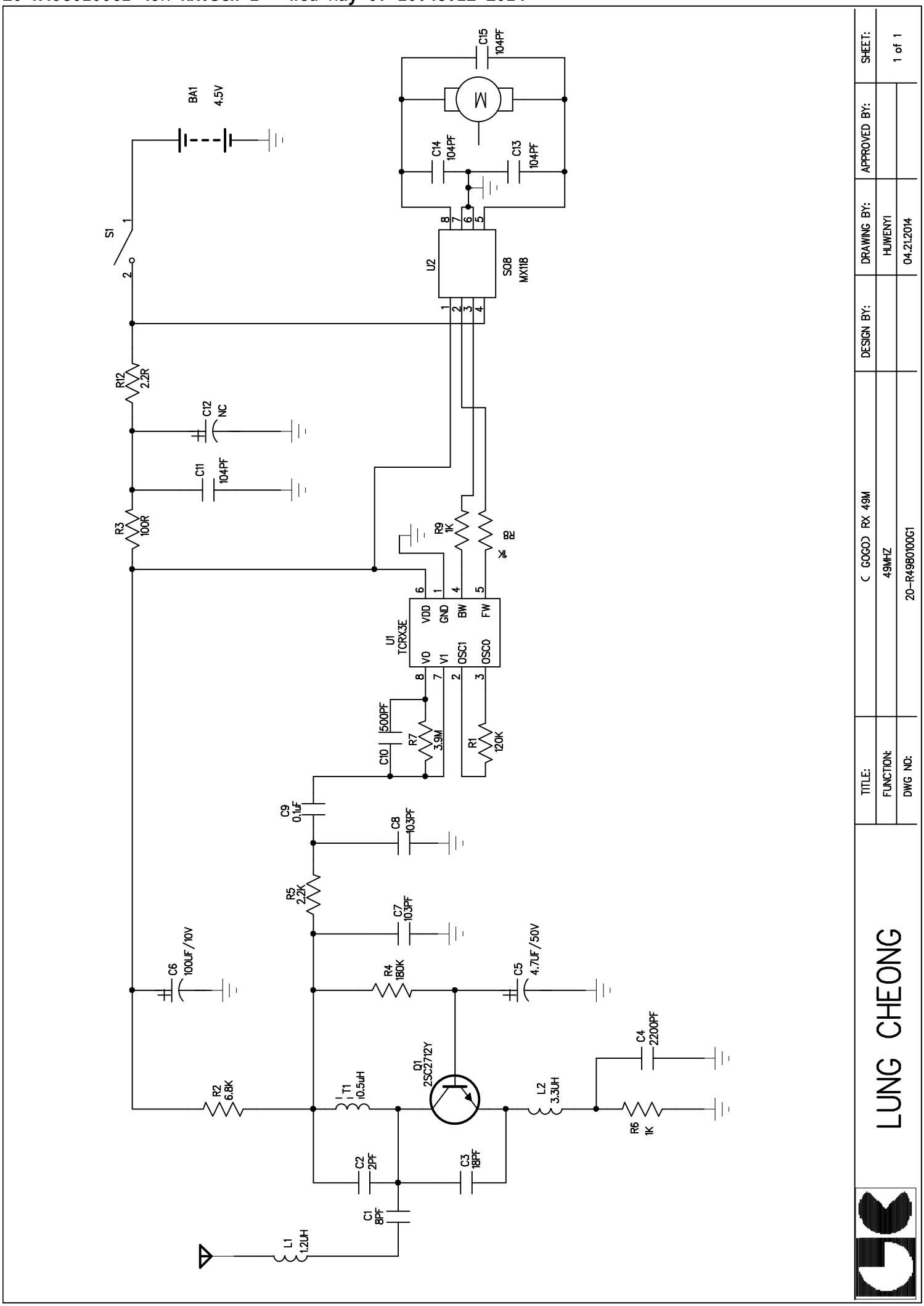
BA1
4.5V
S1
R12
2.2R
C12
NC
C11
104PF
R3
100R
C15
104PF
C14
104PF
C13
104PF
U2
SO8
MX118
R9
1K
R8
1K
U1
TCRX3E
VDD
GND
BW
FW
VO
V1
OSC1
OSCO
C10
500PF
R7
3.9M
R1
120K
C9
0.1uF
C8
10.3PF
R5
2.2K
C7
10.3PF
C6
100UF/10V
R4
180K
C5
4.7UF/50V
C4
2200PF
R2
6.8K
T1
10.5uH
Q1
2SC2712Y
L2
3.3UH
R6
1K
C2
2PF
C3
18PF
C1
8PF
L1
1.2UH
TITLE:
FUNCTION:
DWG NO:
© GOGOD RX 49M
49MHZ
20-R4980100G1
DESIGN BY:
DRAWING BY:
HUWENYI
04.21.2014
APPROVED BY:
SHEET:
1 of 1
LUNG CHEONG