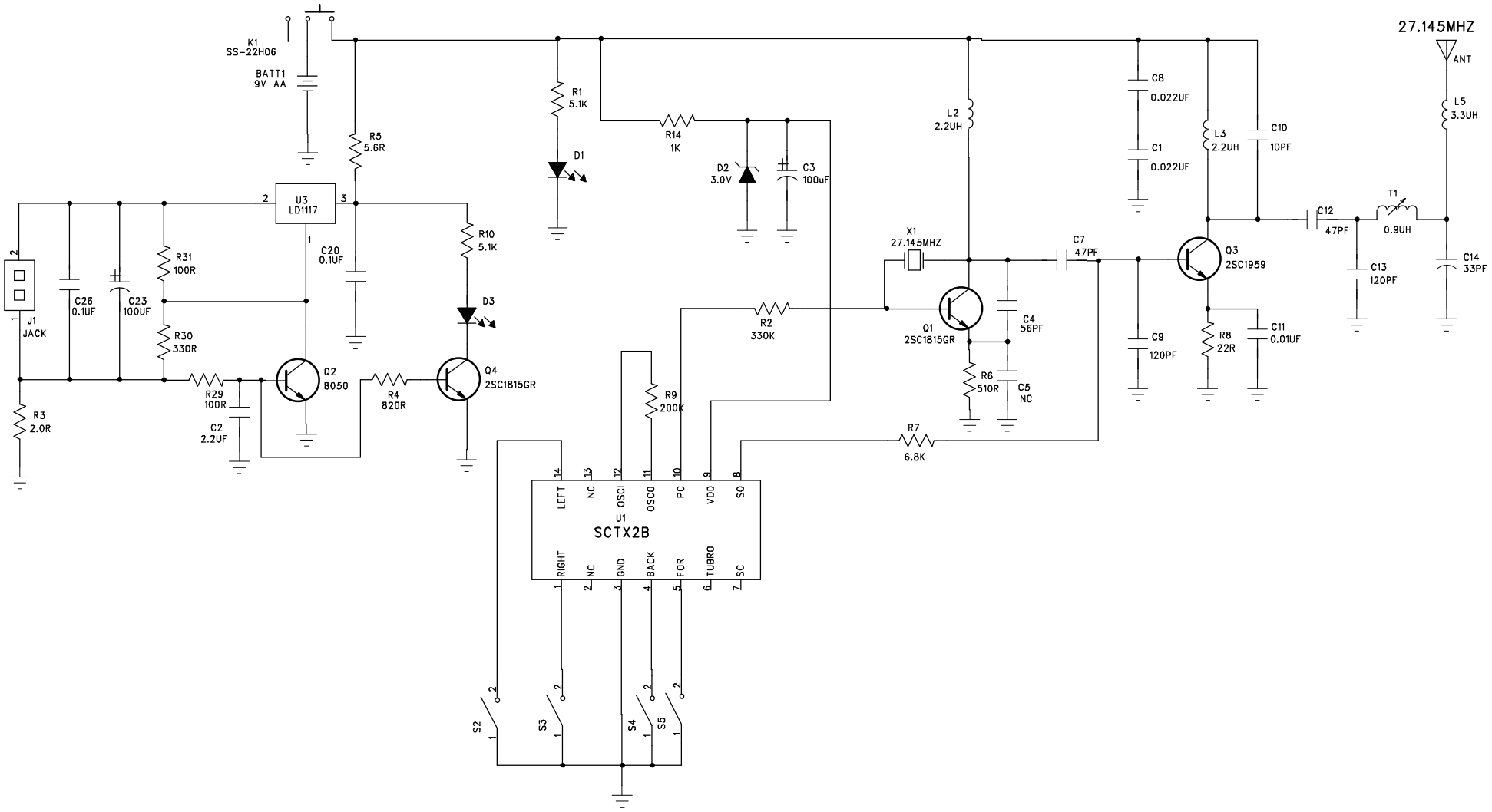


| | | | | | | |
|---|---|---|---|---|---|---|
| LUNG CHEONG | TITLE: | G615 QEAMINIPLANE27T | DESIGN BY: | DRAWING BY: | APPROVED BY: | SHEET: |
| | FUNCTION: | | FX.ZENG | | | 1 of 1 |
| | DWG NO: | | Mar-26-2007 | | | |

PDF 文件使用 "pdfFactory Pro" 试用版本创建 www.fineprint.com.cn