REVISION RECORD				
REV NO.	ECO NO.	DESCRIPTION	APPROVED	DATE

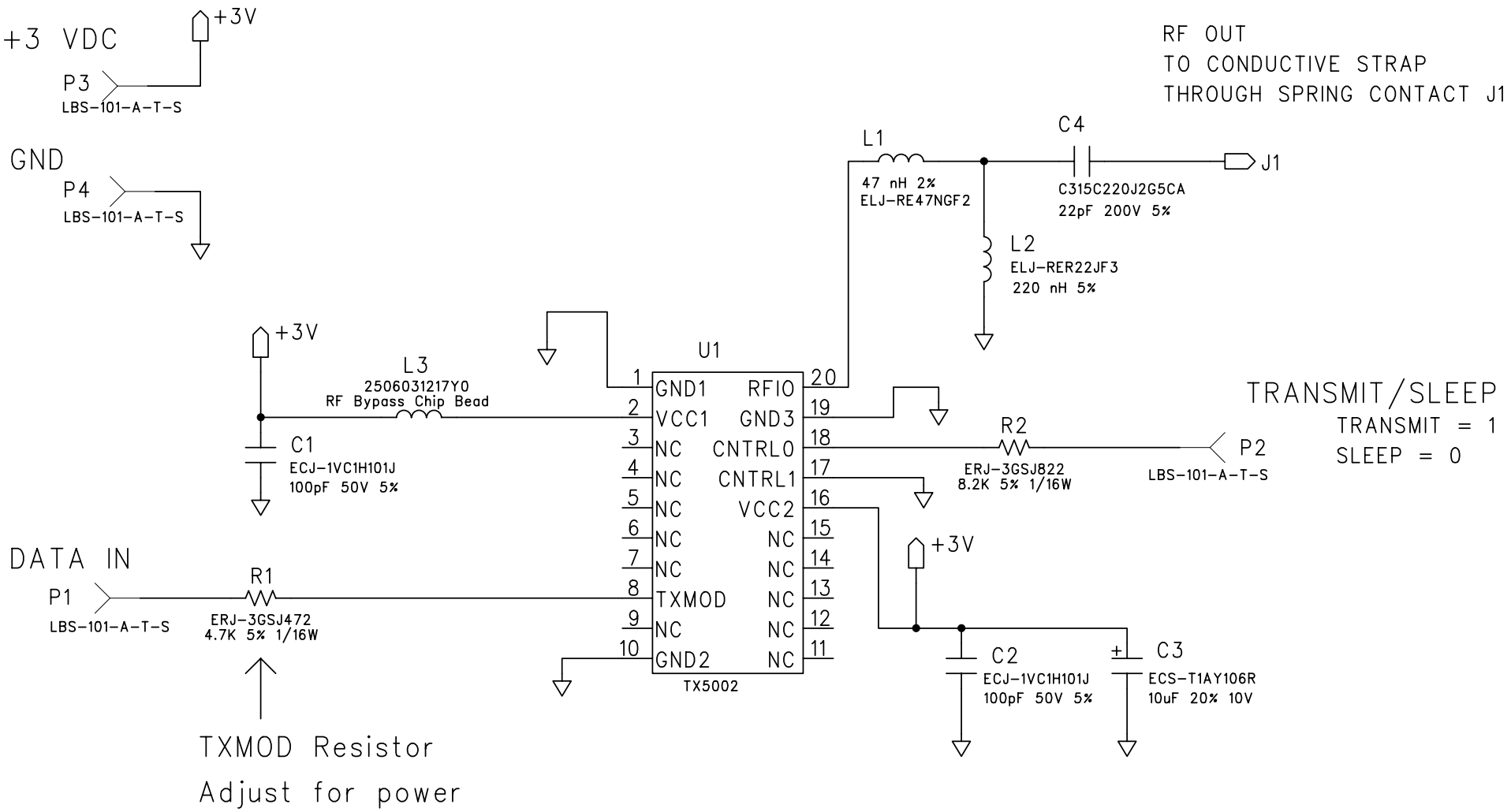

SECURITAS AMERICA INC. 266 N. 20th St., Jacksonville Beach, FL 32250				
TITLE: SCHEMATIC, REUSABLE BAND TOP				SIZE: A
DRAWN: AC	DATED: 02/05/03	DRAWING NO: 001050		REV: 01
CHECKED:	DATED:	ASSEMBLY NO: 060-00050		REV: 01
QC:	DATED:	PCB FAB NO: 015-00050		REV: 00
RELEASED:	DATED:	SCALE: NONE	SHEET 1	OF 1