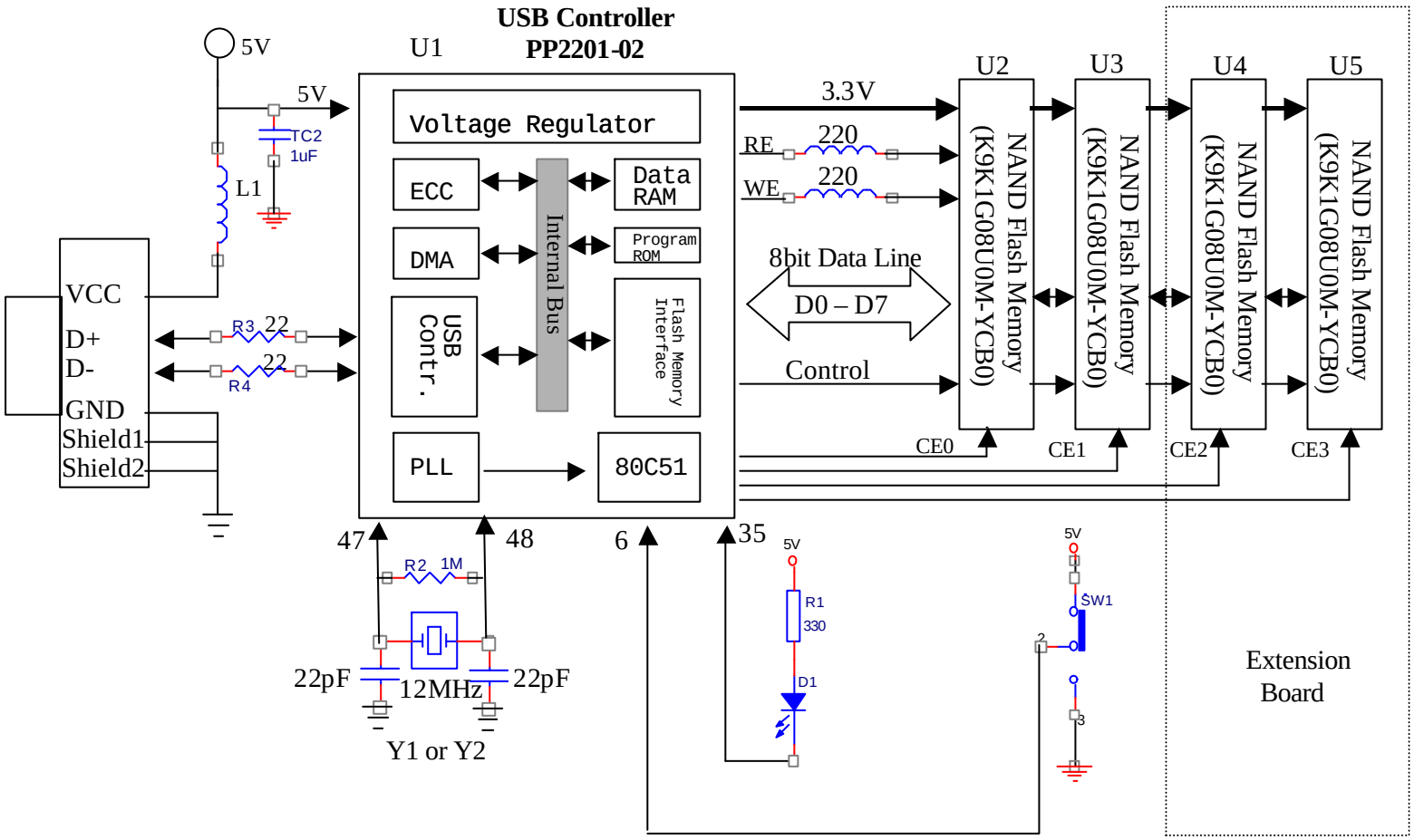STORiUM N Drive Block Diagram