FCC CFR47 PART 22 SUBPART H
FCC CFR47 PART 24 SUBPART E

C2PC CERTIFICATION TEST REPORT

FOR
GSM/WCDMA/LTE Phone + Bluetooth, DTS/UNII a/b/g/n/ac, ANT+ and NFC

FCC ID: PY7-PM0816

REPORT NUMBER: 15U19770-E1

ISSUE DATE: MARCH 18, 2015

Prepared for
SONY MOBILE COMMUNICATIONS, INC.
NYA VATTENTORNET MOBILVAGEN 10
LUND 22188
SWEDEN

Prepared by
UL VERIFICATION SERVICES
47173 BENICIA STREET
FREMONT, CA 94538, U.S.A.
TEL: (510) 771-1000
FAX: (510) 661-0888

NVLAP LAB CODE 200065-0

Revision History

Rev.	Issue Date	Revisions	Revised By
-	03/18/15	Initial Issue	CHOON OOI

UL VERIFICATION SERVICES INC. FORM NO: CCSUP4701I
47173 BENICIA STREET, FREMONT, CA 94538, USA TEL: (510) 771-1000 FAX: (510) 661-0888

This report shall not be reproduced except in full, without the written approval of UL Verification Services Inc.

TABLE OF CONTENTS

1. ATTESTATION OF TEST RESULTS 4
2. TEST METHODOLOGY 5
3. FACILITIES AND ACCREDITATION 5
4. CALIBRATION AND UNCERTAINTY 6
4.1. MEASURING INSTRUMENT CALIBRATION 6
4.2. SAMPLE CALCULATION 6
4.3. MEASUREMENT UNCERTAINTY 6
5. EQUIPMENT UNDER TEST 7
5.1. DESCRIPTION OF EUT 7
5.2. MAXIMUM OUTPUT POWER 7
5.3. DESCRIPTION OF AVAILABLE ANTENNAS 8
5.4. DESCRIPTION OF TEST SETUP 9
6. TEST AND MEASUREMENT EQUIPMENT 12
7. Summary Table 13
8. RF POWER OUTPUT VERIFICATION 14
8.1. GSM/GPRS/EDGE 14
8.1.1. GSM OUTPUT POWER RESULT 15
8.2. UMTS REL 99 17
8.2.1. UMTS REL 99 OUTPUT POWER RESULT 17
8.3. UMTS HSDPA 18
8.3.1. UMTS HSDPA OUTPUT POWER RESULT 18
8.3.2. UMTS HSUPA 19
8.3.3. UMTS HSUPA OUTPUT POWER RESULT 20
9. RADIATED TEST RESULTS 21
9.1. RADIATED POWER (ERP & EIRP) 21
9.1.1. ERP/EIRP Results 22
9.1.2. ERP/EIRP PLOTS 23
9.2. FIELD STRENGTH OF SPURIOUS RADIATION 29
9.2.1. SPURIOUS RADIATION PLOTS 30
10. SETUP PHOTOS 36

UL VERIFICATION SERVICES INC. FORM NO: CCSUP4701I
47173 BENICIA STREET, FREMONT, CA 94538, USA TEL: (510) 771-1000 FAX: (510) 661-0888

This report shall not be reproduced except in full, without the written approval of UL Verification Services Inc.

1. ATTESTATION OF TEST RESULTS

COMPANY NAME:	SONY MOBILE COMMUNICATIONS, INC.
EUT DESCRIPTION:	GSM/WCDMA/LTE PHONE + BLUETOOTH, DTS/UNII a/b/g/n/ac, ANT+ and NFC
SERIAL NUMBER:	207206 (Radiated), 2062750(Radiated),
DATE TESTED:	FEBRUARY 13-MARCH 13, 2015

APPLICABLE STANDARDS	
STANDARD	**TEST RESULTS**
FCC PART 22H and 24E	PASS

UL Verification Services Inc. tested the above equipment in accordance with the requirements set forth in the above standards. All indications of Pass/Fail in this report are opinions expressed by UL Verification Services Inc. based on interpretations and/or observations of test results. Measurement Uncertainties were not taken into account and are published for informational purposes only. The test results show that the equipment tested is capable of demonstrating compliance with the requirements as documented in this report.

Note: The results documented in this report apply only to the tested sample, under the conditions and modes of operation as described herein. This document may not be altered or revised in any way unless done so by UL Verification Services Inc. and all revisions are duly noted in the revisions section. Any alteration of this document not carried out by UL Verification Services Inc. will constitute fraud and shall nullify the document. This report must not be used by the client to claim product certification, approval, or endorsement by NVLAP, NIST, any agency of the Federal Government, or any agency of any government.

Approved & Released For
UL Verification Services Inc. By:

CHOON OOI
CONSUMER TECHNOLOGY DIVISION
WiSE PROJECT LEAD
UL Verification Services Inc.

Tested By:

STEVEN TRAN
CONSUMER TECHNOLOGY DIVISION
WiSE LAB ENGINEER
UL Verification Services Inc.

UL VERIFICATION SERVICES INC. FORM NO: CCSUP4701I
47173 BENICIA STREET, FREMONT, CA 94538, USA TEL: (510) 771-1000 FAX: (510) 661-0888
This report shall not be reproduced except in full, without the written approval of UL Verification Services Inc.

2. TEST METHODOLOGY

The tests documented in this report were performed in accordance with TIA-603-C, FCC CFR 47 Part 22, and FCC CFR Part 24.

3. FACILITIES AND ACCREDITATION

The test sites and measurement facilities used to collect data are located at 47173 and 47266 Benicia Street, Fremont, California, USA. Line conducted emissions are measured only at the 47173 address. The following table identifies which facilities were utilized for radiated emission measurements documented in this report. Specific facilities are also identified in the test results sections.

47173 Benicia Street	47266 Benicia Street
☐ Chamber A(IC: 2324B-1)	☐ Chamber D(IC: 2324B-4)
☒ Chamber B(IC: 2324B-2)	☐ Chamber E(IC: 2324B-5)
☒ Chamber C(IC: 2324B-3)	☐ Chamber F(IC: 2324B-6)
	☐ Chamber G(IC: 2324B-7)
	☐ Chamber H(IC: 2324B-8)

UL Verification Services Inc. is accredited by NVLAP, Laboratory Code 200065-0. The full scope of accreditation can be viewed at http://ts.nist.gov/standards/scopes/2000650.htm

This report shall not be reproduced except in full, without the written approval of UL Verification Services Inc.

4. CALIBRATION AND UNCERTAINTY

4.1. MEASURING INSTRUMENT CALIBRATION

The measuring equipment utilized to perform the tests documented in this report has been calibrated in accordance with the manufacturer's recommendations, and is traceable to recognized national standards

4.2. SAMPLE CALCULATION

Where relevant, the following sample calculation is provided:

EIRP = PSA reading with EUT worst orientation (dBm) + Path loss (dB) – cable loss(between the SG and substitution antenna) + Substitution Antenna Factor (dBi)

ERP = PSA reading with EUT worst orientation (dBm) + Path loss (dB) – cable loss(between the SG and substitution antenna)

(Path loss = Signal generator output – PSA reading with substitution antenna)

4.3. MEASUREMENT UNCERTAINTY

Where relevant, the following measurement uncertainty levels have been estimated for tests performed on the apparatus:

PARAMETER	UNCERTAINTY
Conducted Disturbance, 0.15 to 30 MHz	3.52 dB
Radiated Disturbance, 30 to 1000 MHz	4.94 dB
Radiated Disturbance, 1GHz to 40GHz	4.94 dB

Uncertainty figures are valid to a confidence level of 95%.

UL VERIFICATION SERVICES INC. FORM NO: CCSUP4701I
47173 BENICIA STREET, FREMONT, CA 94538, USA TEL: (510) 771-1000 FAX: (510) 661-0888

This report shall not be reproduced except in full, without the written approval of UL Verification Services Inc.

5. EQUIPMENT UNDER TEST

5.1. DESCRIPTION OF EUT

The EUT is a GSM/WCDMA/LTE PHONE + BLUETOOTH, DTS/UNII a/b/g/n/ac, ANT+ and NFC

5.2. MAXIMUM OUTPUT POWER

The transmitter has a maximum peak conducted and radiated ERP / EIRP output powers as follows:

FCC Part 22/2 4/27						
Band	Frequency Range(MHz)	Modulation mW	Conducted		Radiated	
			AVG(dBm)	AVG(mW)	AVG(dBm)	AVG(mW)
GSM850	824~849	GMSK	33.20	2089.30		
	824~849	GPRS	33.20	2089.30	28.82	762.25
	824~849	EGPRS	26.80	478.63	22.68	185.40
GSM1900	1850~1910	GMSK	30.00	1000.00		
	1850~1910	GPRS	30.00	1000.00	31.40	1380.38
	1850~1910	EGPRS	25.40	346.74	28.03	635.33
Band 5	824~849	REL99	24.30	269.15	20.45	110.94
	824~849	HSDPA	24.30	269.15	20.20	104.74
	824~849	HSUPA	23.80	239.88		

This report shall not be reproduced except in full, without the written approval of UL Verification Services Inc.

5.3. DESCRIPTION OF AVAILABLE ANTENNAS

The radio utilizes a PIFA antenna for the [List the bands supported] with a maximum peak gain as follow:

Frequency (MHz)	Peak Gain (dBi)
GSM850, 824~849MHz	-2.0
GSM1900, 1850~1910MHz	-1.8
Band 5, 824~849MHz	-2.0

UL VERIFICATION SERVICES INC. FORM NO: CCSUP4701I
47173 BENICIA STREET, FREMONT, CA 94538, USA TEL: (510) 771-1000 FAX: (510) 661-0888
This report shall not be reproduced except in full, without the written approval of UL Verification Services Inc.

5.4. DESCRIPTION OF TEST SETUP

SUPPORT EQUIPMENT

Support Equipment List				
Description	**Manufacturer**	**Model**	**Serial Number**	**FCC ID**
AC Adapter	SONY	EP880	3514W 01 S08328	N/A
Earphone	SONY	MH410C	N/A	N/A

I/O CABLES (CONDUCTED SETUP)

I/O Cable List						
Cable No	**Port**	**# of identical ports**	**Connector Type**	**Cable Type**	**Cable Length (m)**	**Remarks**
1	RF Out	1	Spectrum Analyzer	Shielded	None	NA
2	Antenna Port	1	EUT	Shielded	0.1m	NA
3	RF In/Out	1	Communication Test Set	Shielded	1m	NA

I/O CABLES (RADIATED SETUP)

I/O CABLE LIST						
Cable No.	**Port**	**# of Identical Ports**	**Connector Type**	**Cable Type**	**Cable Length**	**Remarks**
1	USB	1	AC Adapter	Un-shielded	1.2m	No
2	Jack	1	Headset	Shielded	1m	No
3	RF In/out	1	Communication Test Set	Un-shielded	2m	Yes

TEST SETUP

The EUT is continuously communicated to the call box during the tests.

UL VERIFICATION SERVICES INC. FORM NO: CCSUP4701I
47173 BENICIA STREET, FREMONT, CA 94538, USA TEL: (510) 771-1000 FAX: (510) 661-0888

This report shall not be reproduced except in full, without the written approval of UL Verification Services Inc.

SETUP DIAGRAM FOR TESTS (CONDUCTED TEST SETUP)

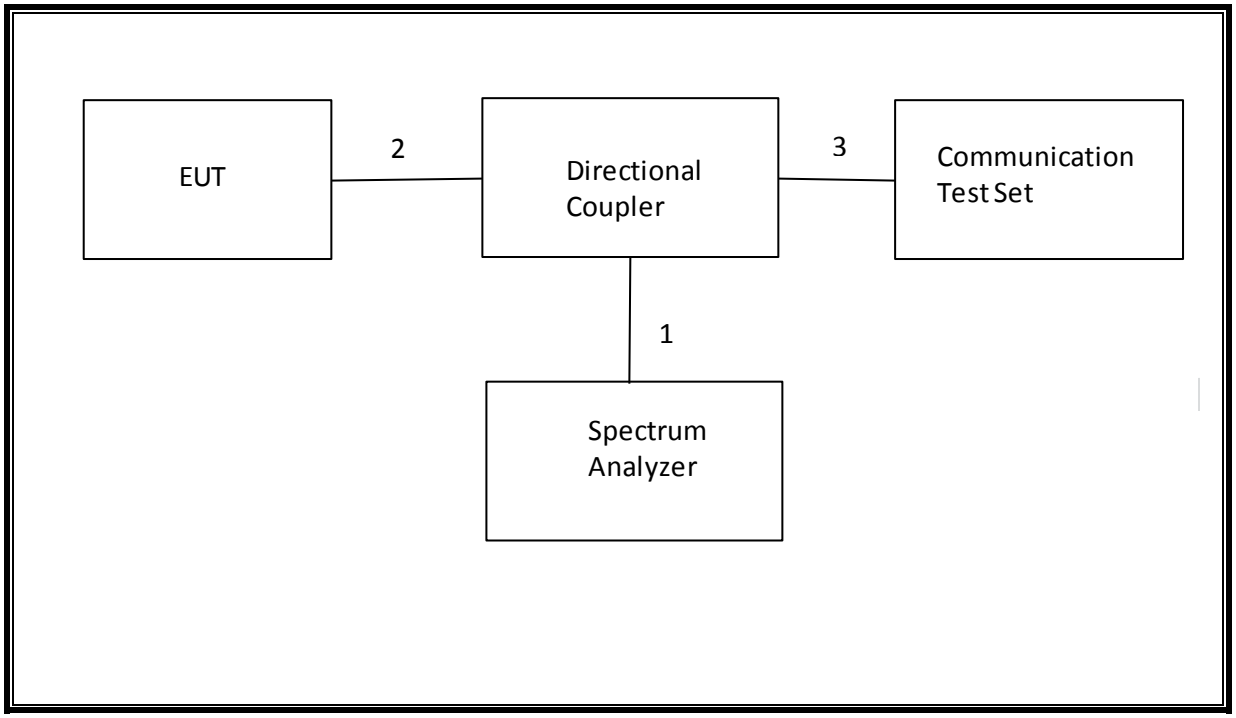

UL VERIFICATION SERVICES INC. FORM NO: CCSUP4701I
47173 BENICIA STREET, FREMONT, CA 94538, USA TEL: (510) 771-1000 FAX: (510) 661-0888
This report shall not be reproduced except in full, without the written approval of UL Verification Services Inc.

SETUP DIAGRAM FOR TESTS (RADIATED TEST SETUP)

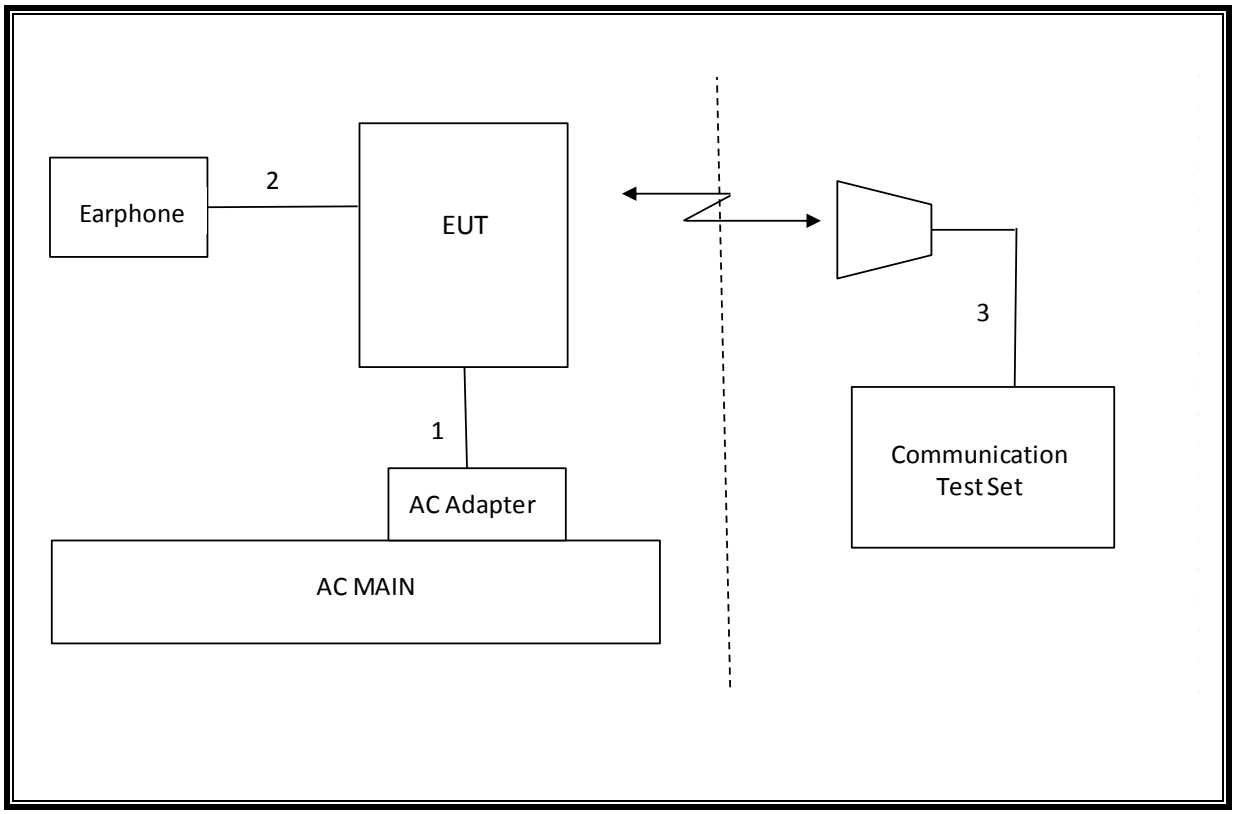

UL VERIFICATION SERVICES INC. FORM NO: CCSUP4701I
47173 BENICIA STREET, FREMONT, CA 94538, USA TEL: (510) 771-1000 FAX: (510) 661-0888

This report shall not be reproduced except in full, without the written approval of UL Verification Services Inc.

6. TEST AND MEASUREMENT EQUIPMENT

The following test and measurement equipment was utilized for the tests documented in this report:

TEST EQUIPMENT LIST				
Description	**Manufacturer**	**Model**	**Asset**	**Cal Due**
Spectrum Analyzer, 44 GHz	Agilent / HP	E4446A	C01179	05/01/15
Antenna, Bilog, 2 GHz	Sunol Sciences	JB1	C01011	04/22/15
Antenna, Horn, 18 GHz	EMCO	3115	C00783	10/25/15
Antenna, Horn, 18 GHz	EMCO	3115	C00784	10/25/15
Highpass Filter, 2.7 GHz	Micro-Tronics	HPM13194	N02687	CNR
Highpass Filter, 1.5 GHz	Micro-Tronics	HPM13193	N02688	CNR
Temperature / Humidity Chamber	Thermotron	SE 600-10-10	C00930	05/11/15
Communications Test Set	R&S	CMW500	T159	07/02/15
DC power supply, 8 V @ 3 A or 15 V	Agilent / HP	E3610A	None	CNR
Vector signal generator, 6 GHz	Agilent / HP	E4438C	None	06/18/15
Antenna, Tuned Dipole 400~1000	ETS	3121C DB4	C00993	02/11/16
Directional Coupler	RF-Lambda	RFDC5M06G15	None	CNR
Antenna, Horn, 26.5 GHz	ARA	MWH-1826/B	C00589	12/17/15

UL VERIFICATION SERVICES INC. FORM NO: CCSUP4701I
47173 BENICIA STREET, FREMONT, CA 94538, USA TEL: (510) 771-1000 FAX: (510) 661-0888

This report shall not be reproduced except in full, without the written approval of UL Verification Services Inc.

7. Summary Table

FCC Part Section	RSS Section(s)	Test Description	Test Limit	Test Condition	Test Result	Note
2.1049	N/A	Occupied Band width (99%)	N/A	Conducted	Pass	See Original
22.917(a) 24.238(a) 27.53(g) 90.691	RSS-132(4.5.1) RSS-133(6.5.1) RSS-139(6.5.1)	Band Edge / Conducted Spurious Emission	-13dBm		Pass	See Original
2.1046	N/A	Conducted output power	N/A		Pass	See Original
22.355 24.235 27.54 90.213	RSS-132(4.3) RSS-133(6.3) RSS-139(6.3) RSS-199(4.3)	Frequency Stability	2.5PPM		Pass	See Original
22.913(a)(2)	RSS-132(4.4)	Effective Radiated Power	38 dBm	Radiated	Pass	28.8 dBm
24.232(c) 27.50(h)(2)	RSS-133(6.4) RSS-199(4.4)	Equivalent Isotropic Radiated Power	33dBm		Pass	31.4 dBm
22.917(a) 24.238(a) 27.53(g)	RSS-132(4.5.1) RSS-133(6.5.1) RSS-139(6.5.1)	Radiated Spurious Emission	-13dBm		Pass	-45.7 dBm

UL VERIFICATION SERVICES INC. FORM NO: CCSUP4701I
47173 BENICIA STREET, FREMONT, CA 94538, USA TEL: (510) 771-1000 FAX: (510) 661-0888

This report shall not be reproduced except in full, without the written approval of UL Verification Services Inc.

8. RF POWER OUTPUT VERIFICATION

8.1. GSM/GPRS/EDGE

Function: Menu select > GSM Mobile Station > GSM 850/900/1800/1900

Press Connection control to choose the different menus

Press RESET > choose all to reset all settings

Connection Press Signal Off to turn off the signal and change settings

Network Support > GSM+GPRS or GSM+EGPRS

Main Service > Packet Data

Service selection > Test Mode A – Auto Slot Config. off

MS Signal Press Slot Config bottom on the right twice to select and change the number of time slots and power setting

> Slot configuration > Uplink/Gamma

> 33 dBm for GPRS 850/900

> 30 dBm for GPRS1800/1900

BS Signal Enter the same channel number for TCH channel (test channel) and BCCH channel

Frequency Offset > + 0 Hz

Mode > BCCH and TCH

BCCH Level > -85 dBm (May need to adjust if link is not stable)

BCCH Channel > choose desire test channel [Enter the same channel number for TCH channel (test channel) and BCCH channel]

Channel Type > Off

P0> 4 dB

Slot Config > Unchanged (if already set under MS Signal)

TCH > choose desired test channel

Hopping > Off

Main Timeslot > 3 (Default)

Network Coding Scheme > CS4 (GPRS) and MCS5 ~ MCS9 (EGPRS)

Bit Stream > 2E9-1PSR Bit Pattern

AF/RF Enter appropriate offsets for Ext. Att. Output and Ext. Att. Input

Connection Press Signal On to turn on the signal and change settings

UL VERIFICATION SERVICES INC. FORM NO: CCSUP4701I
47173 BENICIA STREET, FREMONT, CA 94538, USA TEL: (510) 771-1000 FAX: (510) 661-0888

This report shall not be reproduced except in full, without the written approval of UL Verification Services Inc.

8.1.1. GSM OUTPUT POWER RESULT

Mode	Coding Scheme	Time Slots	Ch No.	Freq. (MHz)	Burst Pwr (dBm)
GSM (Voice)	CS1	1	128	824.2	33.1
			190	836.6	33.2
			251	848.8	33.2
GPRS (GMSK)	CS1	1	128	824.2	33.1
			190	836.6	33.2
			251	848.8	33.2
		2	128	824.2	29.9
			190	836.6	29.9
			251	848.8	30.0
		3	128	824.2	27.9
			190	836.6	27.9
			251	848.8	28.0
		4	128	824.2	27.1
			190	836.6	27.1
			251	848.8	27.1
EGPRS (8PSK)	MCS5	1	128	824.2	26.6
			190	836.6	26.7
			251	848.8	26.8
		2	128	824.2	24.7
			190	836.6	24.8
			251	848.8	25.0
		3	128	824.2	23.6
			190	836.6	23.6
			251	848.8	23.8
		4	128	824.2	21.5
			190	836.6	21.6
			251	848.8	21.7

UL VERIFICATION SERVICES INC. FORM NO: CCSUP4701I
47173 BENICIA STREET, FREMONT, CA 94538, USA TEL: (510) 771-1000 FAX: (510) 661-0888
This report shall not be reproduced except in full, without the written approval of UL Verification Services Inc.

Mode	Coding Scheme	Time Slots	Ch No.	Freq. (MHz)	Burst Pwr (dBm)
GSM (Voice)	CS1	1	512	1850.2	29.8
			661	1880.0	30.0
			810	1909.8	30.0
GPRS (GMSK)	CS1	1	512	1850.2	29.8
			661	1880.0	30.0
			810	1909.8	30.0
		2	512	1850.2	27.0
			661	1880.0	27.0
			810	1909.8	26.9
		3	512	1850.2	25.9
			661	1880.0	25.7
			810	1909.8	25.8
		4	512	1850.2	24.9
			661	1880.0	24.8
			810	1909.8	24.7
EGPRS (8PSK)	MCS5	1	512	1850.2	25.4
			661	1880.0	25.4
			810	1909.8	25.3
		2	512	1850.2	23.6
			661	1880.0	23.5
			810	1909.8	23.5
		3	512	1850.2	22.5
			661	1880.0	22.4
			810	1909.8	22.4
		4	512	1850.2	21.4
			661	1880.0	21.3
			810	1909.8	21.3

UL VERIFICATION SERVICES INC. FORM NO: CCSUP4701I
47173 BENICIA STREET, FREMONT, CA 94538, USA TEL: (510) 771-1000 FAX: (510) 661-0888
This report shall not be reproduced except in full, without the written approval of UL Verification Services Inc.

8.2. UMTS REL 99

TEST PROCEDURE

The following summary of these settings are illustrated below:

	Mode	Rel99
	Subtest	-
WCDMA General Settings	Loopback Mode	Test Mode 1
	Rel99 RMC	12.2kbps RMC
	HSDPA FRC	Not Applicable
	HSUPA Test	Not Applicable
	Power Control Algorithm	Algorithm2
	βc	Not Applicable
	βd	Not Applicable
	βec	Not Applicable
	βc/βd	8/15
	βhs	Not Applicable
	βed	Not Applicable

8.2.1. UMTS REL 99 OUTPUT POWER RESULT

Band	Mode	UL Ch No.	Freq. (MHz)	MPR	Avg Pwr (dBm)
W-CDMA Band V	Rel 99 (RMC, 12.2 kbps)	4132	826.4	0	24.3
		4183	836.6	0	24.3
		4233	846.6	0	24.3

This report shall not be reproduced except in full, without the written approval of UL Verification Services Inc.

8.3. UMTS HSDPA

The following 4 Sub-tests were completed according to Release 5 procedures in section 5.2 of 3GPP TS34.121. A summary of these settings are illustrated below:

	Mode	Rel5 HSDPA			
	Subtest	1	2	3	4
WCDMA General Settings	Loopback Mode	Test Mode 1			
	Rel99 RMC	12.2kbps RMC			
	HSDPA FRC	H-Set1			
	Power Control Algorithm	Algorithm 2			
	βc	2/15	12/15	15/15	15/15
	βd	15/15	15/15	8/15	4/15
	Bd (SF)	64			
	βc/βd	2/15	12/15	15/8	15/4
	βhs	4/15	24/15	30/15	30/15
	MPR (dB)	0	0	0.5	0.5
HSDPA Specific Settings	D_{ACK}	8			
	D_{NAK}	8			
	DCQI	8			
	Ack-Nack repetition factor	3			
	CQI Feedback (Table 5.2B.4)	4ms			
	CQI Repetition Factor (Table 5.2B.4)	2			
	Ahs =βhs/βc	30/15			

8.3.1. UMTS HSDPA OUTPUT POWER RESULT

Band	Mode	UL Ch No.	Freq. (MHz)	MPR	Avg Pwr (dBm)
W-CDMA Band V	Subtest 1	4132	826.4	0	24.3
		4183	836.6	0	24.3
		4233	846.6	0	24.3
	Subtest 2	4132	826.4	0	24.3
		4183	836.6	0	24.3
		4233	846.6	0	24.3
	Subtest 3	4132	826.4	0.5	23.9
		4183	836.6	0.5	23.8
		4233	846.6	0.5	23.9
	Subtest 4	4132	826.4	0.5	23.9
		4183	836.6	0.5	23.8
		4233	846.6	0.5	23.9

UL VERIFICATION SERVICES INC. FORM NO: CCSUP4701I
47173 BENICIA STREET, FREMONT, CA 94538, USA TEL: (510) 771-1000 FAX: (510) 661-0888
This report shall not be reproduced except in full, without the written approval of UL Verification Services Inc.

8.3.2. UMTS HSUPA

TEST PROCEDURE

The following summary of these settings are illustrated below: (ETSI TS 134.121-1 Table C.11.1)

	Mode	Rel6 HSUPA	Rel6 HSUPA	Rel6 HSUPA	Rel6 HSUPA	Rel6 HSUPA
	Subtest	1	2	3	4	5
WCDMA General Settings	Loopback Mode	Test Mode 1				
	P-CPICH (dB)	-10				
	P-CCPCH (dB)	-12				
	SCH (dB)	-12				
	PICH(dB)	-15				
	DPCH (dB)	-9				
	HS-SCCH_1 (dB)	-8				
	HS-PDSCH (dB)	-3				
	Rel99 RMC	12.2kbps RMC				
	HSDPA FRC	H-Set1				
	HSUPA Test	HSUPA Loopback				
	Power Control Algorithm	Algorithm2				
	Bc	11/15	6/15	15/15	2/15	15/15
	Bd	15/15	15/15	9/15	15/15	15/15
	Bec	209/225	12/15	30/15	2/15	5/15
	βc/βd	11/15	6/15	15/9	2/15	15/15
	Bhs	22/15	12/15	30/15	4/15	30/15
	βed (note1)	1309/225	94/75	47/15 47/15	56/75	134/15
	MPR	0	2	1	2	0
HSDPA Specific Settings	DACK	8				
	DNAK	8				
	DCQI	8				
	Ack-Nack repetition factor	3				
	CQI Feedback (Table 5.2B.4)	4ms				
	CQI Repetition Factor (Table 5.2B.4)	2				
	Ahs = βhs/βc	30/15				
HSUPA Specific Settings	D E-DPCCH	6	8	8	5	7
	DHARQ	0	0	0	0	0
	AG Index	20	12	15	17	21
	Reference E-TFCIs	5	5	2	5	5
	ETFCI (from 34.121 Table C.11.1.3)	75	67	92	71	81
	Associated Max UL Data Rate kbps	242.1	174.9	482.8	205.8	308.9
	Reference E_TFCIs	E-TFCI 11 E-TFCI PO 4 E-TFCI 67 E-TFCI PO 18 E-TFCI 71 E-TFCI PO 23 E-TFCI 75 E-TFCI PO 26 E-TFCI 81 E-TFCI PO 27		E-TFCI 11 E-TFCI PO 4 E-TFCI 92 E-TFCI PO 18	E-TFCI 11 E-TFCI PO 4 E-TFCI 67 E-TFCI PO 18 E-TFCI 71 E-TFCI PO 23 E-TFCI 75 E-TFCI PO 26 E-TFCI 81 E-TFCI PO 27	

Note1: βed cannot be set directly, it is set by Absolute Grant Value.

This report shall not be reproduced except in full, without the written approval of UL Verification Services Inc.

8.3.3. UMTS HSUPA OUTPUT POWER RESULT

HSUPA **Tune-up Tolerance (dB):**

Band	Mode	UL Ch No.	Freq. (MHz)	MPR	Avg Pwr (dBm)
W-CDMA Band V	Subtest 1	4132	826.4	0	23.8
		4183	836.6	0	23.5
		4233	846.6	0	23.3
	Subtest 2	4132	826.4	2	22.5
		4183	836.6	2	22.7
		4233	846.6	2	22.9
	Subtest 3	4132	826.4	1	23.3
		4183	836.6	1	23.1
		4233	846.6	1	23.2
	Subtest 4	4132	826.4	2	22.5
		4183	836.6	2	22.7
		4233	846.6	2	22.9
	Subtest 5	4132	826.4	0	23.8
		4183	836.6	0	23.5
		4233	846.6	0	23.3

This report shall not be reproduced except in full, without the written approval of UL Verification Services Inc.

9. RADIATED TEST RESULTS

9.1. RADIATED POWER (ERP & EIRP)

RULE PART(S)

FCC: §2.1046, §22.913, and §24.232

LIMITS

22.913(a) - The ERP of mobile transmitters and auxiliary test transmitters must not exceed 7 Watts.

24.232(c) - Mobile/portable stations are limited to 2 watts e.i.r.p. peak power and the equipment must employ means to limit the power to the minimum necessary for successful communications.

TEST PROCEDURE

ANSI / TIA / EIA 603C Clause 2.2.17; PSA setting reference to 971168 D01 v02r02

For peak power measurement with a PSA:

a) Set the RBW ≥ OBW; b) Set VBW ≥ 3 × RBW; c) Set span ≥ 2 x RBW; d) Sweep time = auto couple; e) Detector = peak; f) Ensure that the number of measurement points ≥ span/RBW; g) Trace mode = max hold;

For average power measurement with a PSA:

a) Set span to at least 1.5 times the OBW; b) Set RBW = 1-5% of the OBW, not to exceed 1 MHz; c) Set VBW ≥ 3 x RBW; d) Set number of points in sweep ≥ 2 × span / RBW; e) Sweep time = auto-couple; f) Detector = RMS (power averaging); g) Use free run trigger If burst duty cycle ≥ 98; h) Use trigger to capture bursts If burst duty cycle < 98; i) Trace average at least 100 traces in power averaging (*i.e.*, RMS) mode. j) Compute the power by integrating the spectrum across the OBW of the signal using the instrument's band power measurement function.

MODES TESTED

GSM and WCDMA

TEST RESULTS

UL VERIFICATION SERVICES INC. FORM NO: CCSUP4701I
47173 BENICIA STREET, FREMONT, CA 94538, USA TEL: (510) 771-1000 FAX: (510) 661-0888

This report shall not be reproduced except in full, without the written approval of UL Verification Services Inc.

9.1.1. ERP/EIRP Results

Band	Mode	Channel	f(MHz)	ERP / EIRP	
				dBm	mW
WCDMA Band 5	REL99	4132	826.4	19.60	91.22
		4183	836.6	19.93	98.42
		4233	846.6	20.45	110.94
	HSDPA	4132	826.4	19.40	87.12
		4183	836.6	19.80	95.52
		4233	846.6	20.20	104.74

Band	Mode	Channel	f(MHz)	ERP / EIRP	
				dBm	mW
GSM1900	GPRS	512	1850.2	30.97	1250.26
		661	1880	31.02	1264.74
		810	1909.8	31.40	1380.38
	EGPRS	512	1850.2	27.36	544.5
		661	1880	27.19	523.6
		810	1909.8	28.03	635.33

Band	Mode	Channel	f(MHz)	ERP / EIRP	
				dBm	mW
GSM850	GPRS	128	824.2	27.04	505.94
		190	836.6	27.73	593.06
		251	848.8	28.82	762.25
	EGPRS	128	824.2	21.40	138.07
		190	836.6	21.70	147.94
		251	848.8	22.68	185.40

UL VERIFICATION SERVICES INC. FORM NO: CCSUP4701I
47173 BENICIA STREET, FREMONT, CA 94538, USA TEL: (510) 771-1000 FAX: (510) 661-0888
This report shall not be reproduced except in full, without the written approval of UL Verification Services Inc.

9.1.2. ERP/EIRP PLOTS

Band

Band 5

HSDPA

High Frequency Substitution Measurement
UL Verification Services, Inc. Chamber C

Company: Sony
Project #: 15U19770
Date: 03/09/15
Test Engineer: K.Kedida
Configuration: EUT only Y position
Mode: HSDPA B5 FUND

Test Equipment:
Receiving: Sunol T185, and 3m Chamber C N-type Cable
Substitution: Dipole T273, 4ft SMA Cable Warehouse.

f MHz	SG reading (dBm)	Ant. Pol. (H/V)	Cable Loss (dB)	Antenna Gain (dBd)	ERP (dBm)	Limit (dBm)	Margin (dB)	Notes
Low Ch								
826.40	14.80	V	0.9	0.0	13.90	38.5	-24.5	
826.40	20.30	H	0.9	0.0	19.40	38.5	-19.0	
Mid Ch								
836.60	16.17	V	0.9	0.0	15.27	38.5	-23.2	
836.60	20.70	H	0.9	0.0	19.80	38.5	-18.6	
High Ch								
846.60	15.52	V	0.9	0.0	14.62	38.5	-23.8	
846.60	21.10	H	0.9	0.0	20.20	38.5	-18.2	

Rev. 3.17.11
Note: For Band 13/17 ERP limit is 34.77dBm; For Band 26 limit is 50dBm

UL VERIFICATION SERVICES INC. FORM NO: CCSUP4701I
47173 BENICIA STREET, FREMONT, CA 94538, USA TEL: (510) 771-1000 FAX: (510) 661-0888
This report shall not be reproduced except in full, without the written approval of UL Verification Services Inc.

Band

Band 5

REL99

High Frequency Substitution Measurement
UL Verification Services, Inc. Chamber C

Company: Sony
Project #: 15U19770
Date: 03/09/15
Test Engineer: K.Kedida
Configuration: EUT only Y position
Mode: REL99 B5 FUND

Test Equipment:
Receiving: Sunol T185, and 3m Chamber C N-type Cable
Substitution: Dipole T273, 4ft SMA Cable Warehouse.

f MHz	SG reading (dBm)	Ant. Pol. (H/V)	Cable Loss (dB)	Antenna Gain (dBd)	ERP (dBm)	Limit (dBm)	Margin (dB)	Notes
Low Ch								
826.40	14.60	V	0.9	0.0	13.70	38.5	-24.7	
826.40	20.50	H	0.9	0.0	19.60	38.5	-18.8	
Mid Ch								
836.60	16.10	V	0.9	0.0	15.20	38.5	-23.2	
836.60	20.83	H	0.9	0.0	19.93	38.5	-18.5	
High Ch								
846.60	15.48	V	0.9	0.0	14.58	38.5	-23.9	
846.60	21.35	H	0.9	0.0	20.45	38.5	-18.0	

Rev. 3.17.11
Note: For Band 13/17 ERP limit is 34.77dBm; For Band 26 limit is 50dBm

UL VERIFICATION SERVICES INC. FORM NO: CCSUP4701I
47173 BENICIA STREET, FREMONT, CA 94538, USA TEL: (510) 771-1000 FAX: (510) 661-0888
This report shall not be reproduced except in full, without the written approval of UL Verification Services Inc.

Band

GSM 1900

EGPRS

High Frequency Substitution Measurement
UL Verification Services, Inc. Chamber C

Company: Sony
Project #: 15U19770
Date: 03/09/15
Test Engineer: K.Kedida
Configuration: EUT only X position
Mode: EGPRS 1900MHz

Test Equipment:
Receiving: Horn T119, and Chamber C SMA Cables
Substitution: Horn T72 Substitution, 4ft SMA Cable Warehouse

f MHz	SG reading (dBm)	Ant. Pol. (H/V)	Cable Loss (dB)	Antenna Gain (dBi)	EIRP (dBm)	Limit (dBm)	Margin (dB)	Notes
Low Ch								
1850.20	12.76	V	0.85	7.9	19.81	33.0	-13.2	
1850.20	20.31	H	0.85	7.9	27.36	33.0	-5.6	
Mid Ch								
1880.00	12.30	V	0.85	7.9	19.35	33.0	-13.7	
1880.00	20.14	H	0.85	7.9	27.19	33.0	-5.8	
High Ch								
1909.80	12.58	V	0.85	7.9	19.63	33.0	-13.4	
1909.80	20.98	H	0.85	7.9	28.03	33.0	-5.0	

Rev. 3.17.11
Note: For Band 4 EIRP limit is 30dBm

UL VERIFICATION SERVICES INC. FORM NO: CCSUP4701I
47173 BENICIA STREET, FREMONT, CA 94538, USA TEL: (510) 771-1000 FAX: (510) 661-0888
This report shall not be reproduced except in full, without the written approval of UL Verification Services Inc.

Band

GSM 1900

GPRS

High Frequency Substitution Measurement
UL Verification Services, Inc. Chamber C

Company: Sony
Project #: 15U19770
Date: 03/09/15
Test Engineer: K.Kedida
Configuration: EUT only X position
Mode: EGPRS 1900MHz

Test Equipment:
Receiving: Horn T119, and Chamber C SMA Cables
Substitution: Horn T72 Substitution, 4ft SMA Cable Warehouse

f MHz	SG reading (dBm)	Ant. Pol. (H/V)	Cable Loss (dB)	Antenna Gain (dBi)	EIRP (dBm)	Limit (dBm)	Margin (dB)	Notes
Low Ch								
1850.20	17.30	V	0.85	7.9	24.35	33.0	-8.7	
1850.20	23.92	H	0.85	7.9	30.97	33.0	-2.0	
Mid Ch								
1880.00	17.80	V	0.85	7.9	24.85	33.0	-8.2	
1880.00	23.97	H	0.85	7.9	31.02	33.0	-2.0	
High Ch								
1909.80	18.62	V	0.85	7.9	25.67	33.0	-7.3	
1909.80	24.35	H	0.85	7.9	31.40	33.0	-1.6	

Rev. 3.17.11
Note: For Band 4 EIRP limit is 30dBm

UL VERIFICATION SERVICES INC. FORM NO: CCSUP4701I
47173 BENICIA STREET, FREMONT, CA 94538, USA TEL: (510) 771-1000 FAX: (510) 661-0888
This report shall not be reproduced except in full, without the written approval of UL Verification Services Inc.

Band

GSM 850

EGPRS

High Frequency Substitution Measurement
UL Verification Services, Inc. Chamber C

Company: Sony
Project #: 15U19770
Date: 03/09/15
Test Engineer: K.Kedida
Configuration: EUT only Y position
Mode: EGPRS 850MHz

Test Equipment:
Receiving: Sunol T185, and 3m Chamber N-type Cable (Setup this one for testing EUT)
Substitution: Dipole S/N: 00022117, 5ft SMA Cable (SN # 16795) Warehouse.

f MHz	SG reading (dBm)	Ant. Pol. (H/V)	Cable Loss (dB)	Antenna Gain (dBd)	ERP (dBm)	Limit (dBm)	Margin (dB)	Notes
Low Ch								
824.20	15.40	V	0.5	0.0	14.90	38.5	-23.5	
824.20	21.90	H	0.5	0.0	21.40	38.5	-17.0	
Mid Ch								
836.60	14.40	V	0.5	0.0	13.90	38.5	-24.5	
836.60	22.20	H	0.5	0.0	21.70	38.5	-16.7	
High Ch								
848.80	15.50	V	0.5	0.0	15.00	38.5	-23.4	
848.80	23.18	H	0.5	0.0	22.68	38.5	-15.8	

Rev. 3.17.11
Note: For Band 13/17 ERP limit is 34.77dBm; For Band 26 limit is 50dBm

UL VERIFICATION SERVICES INC. FORM NO: CCSUP4701I
47173 BENICIA STREET, FREMONT, CA 94538, USA TEL: (510) 771-1000 FAX: (510) 661-0888
This report shall not be reproduced except in full, without the written approval of UL Verification Services Inc.

Band

GSM 850

GPRS

High Frequency Substitution Measurement
UL Verification Services, Inc. Chamber C

Company: Sony
Project #: 15U19770
Date: 03/09/15
Test Engineer: K.Kedida
Configuration: EUT only Y position
Mode: GPRS 850MHz

Test Equipment:
Receiving: Sunol T185, and 3m Chamber N-type Cable (Setup this one for testing EUT)
Substitution: Dipole S/N: 00022117, 5ft SMA Cable (SN # 16795) Warehouse.

f MHz	SG reading (dBm)	Ant. Pol. (H/V)	Cable Loss (dB)	Antenna Gain (dBd)	ERP (dBm)	Limit (dBm)	Margin (dB)	Notes
Low Ch								
824.20	19.87	V	0.5	0.0	19.37	38.5	-19.1	
824.20	27.54	H	0.5	0.0	27.04	38.5	-11.4	
Mid Ch								
836.60	20.00	V	0.5	0.0	19.50	38.5	-18.9	
836.60	28.23	H	0.5	0.0	27.73	38.5	-10.7	
High Ch								
848.80	21.01	V	0.5	0.0	20.51	38.5	-17.9	
848.80	29.32	H	0.5	0.0	28.82	38.5	-9.6	

Rev. 3.17.11
Note: For Band 13/17 ERP limit is 34.77dBm; For Band 26 limit is 50dBm

UL VERIFICATION SERVICES INC. FORM NO: CCSUP4701I
47173 BENICIA STREET, FREMONT, CA 94538, USA TEL: (510) 771-1000 FAX: (510) 661-0888
This report shall not be reproduced except in full, without the written approval of UL Verification Services Inc.

9.2. FIELD STRENGTH OF SPURIOUS RADIATION

RULE PART(S)

FCC: §2.1053, §22.917, §24.238, §27.53 and §90.691

LIMIT

The power of any emission outside of the authorized operating frequency ranges must be attenuated below the transmitting power (P) by a factor of at least 43 + 10 log (P) dB.

Part 27: (m)(4) For mobile station, the attenuation factor shall be not less than 43+10Log(P)dB at the channel edge and (55+10Log(P)dB) at 5.5MHz from the channel edges.

TEST PROCEDURE

For Cellular equipment - Compliance with these rules is based on the use of measurement instrumentation employing a resolution bandwidth of 100 kHz or greater. In the 1 MHz bands immediately outside and adjacent to the frequency block a resolution bandwidth of at least one percent of the emission bandwidth of the fundamental emission of the transmitter may be employed. A narrower resolution bandwidth is permitted in all cases to improve measurement accuracy provided the measured power is integrated over the full required measurement bandwidth (i.e. 100 kHz or 1 percent of emission bandwidth, as specified). The emission bandwidth is defined as the width of the signal between two points, one below the carrier center frequency and one above the carrier center frequency, outside of which all emissions are attenuated at least 26 dB below the transmitter power.

For PCS equipment - Compliance with these rules is based on the use of measurement instrumentation employing a resolution bandwidth of 1 MHz or greater. However, in the 1 MHz bands immediately outside and adjacent to the frequency block a resolution bandwidth of at least one percent of the emission bandwidth of the fundamental emission of the transmitter may be employed. A narrower resolution bandwidth is permitted in all cases to improve measurement accuracy provided the measured power is integrated over the full required measurement bandwidth (i.e. 1 MHz or 1 percent of emission bandwidth, as specified). The emission bandwidth is defined as the width of the signal between two points, one below the carrier center frequency and one above the carrier center frequency, outside of which all emissions are attenuated at least 26 dB below the transmitter power.

MODES TESTED

RESULTS

UL VERIFICATION SERVICES INC. FORM NO: CCSUP4701I
47173 BENICIA STREET, FREMONT, CA 94538, USA TEL: (510) 771-1000 FAX: (510) 661-0888

This report shall not be reproduced except in full, without the written approval of UL Verification Services Inc.

9.2.1. SPURIOUS RADIATION PLOTS

Band 5

REL99

UL Verification Services, Inc.
Above 1GHz High Frequency Substitution Measurement

Company: Sony
Project #: 15U19770
Date: 03/10/15
Test Engineer: K.Kedida
Configuration: EUT w/ HS + AC adaptor Y position
Mode: WCDMA_REL 99_B5_HARM

Chamber	Pre-amplifer	Filter	Limit
3m Chamber	T34 8449B	Filter 1	Part 22

f GHz	SG reading (dBm)	Ant. Pol. (H/V)	Distance (m)	Preamp (dB)	Filter (dB)	EIRP (dBm)	Limit (dBm)	Delta (dB)	Notes
Low Ch, 824.2MHz									
1.648	-24.0	V	3.0	37.4	1.0	-60.4	-13.0	-47.4	
2.473	-20.7	V	3.0	36.4	1.0	-56.1	-13.0	-43.1	
3.297	-21.0	V	3.0	35.8	1.0	-55.8	-13.0	-42.8	
1.648	-19.6	H	3.0	37.4	1.0	-56.0	-13.0	-43.0	
2.473	-19.8	H	3.0	36.4	1.0	-55.2	-13.0	-42.2	
3.297	-19.1	H	3.0	35.8	1.0	-53.9	-13.0	-40.9	
Mid Ch, 836.6MHz									
1.673	-23.1	V	3.0	37.3	1.0	-59.5	-13.0	-46.5	
2.510	-23.0	V	3.0	36.4	1.0	-58.3	-13.0	-45.3	
3.346	-20.4	V	3.0	35.8	1.0	-55.2	-13.0	-42.2	
1.673	-17.9	H	3.0	37.3	1.0	-54.2	-13.0	-41.2	
2.510	-19.4	H	3.0	36.4	1.0	-54.8	-13.0	-41.8	
3.346	-19.6	H	3.0	35.8	1.0	-54.4	-13.0	-41.4	
High Ch, 848.8MHz									
1.698	-23.9	V	3.0	37.3	1.0	-60.2	-13.0	-47.2	
2.547	-21.6	V	3.0	36.3	1.0	-56.9	-13.0	-43.9	
3.395	-21.2	V	3.0	35.7	1.0	-55.9	-13.0	-42.9	
1.698	-19.2	H	3.0	37.3	1.0	-55.5	-13.0	-42.5	
2.547	-23.3	H	3.0	36.3	1.0	-58.6	-13.0	-45.6	
3.395	-20.5	H	3.0	35.7	1.0	-55.2	-13.0	-42.2	

Rev. 03.03.09
Note: No other emissions were detected above the system noise floor.

UL VERIFICATION SERVICES INC. FORM NO: CCSUP4701I
47173 BENICIA STREET, FREMONT, CA 94538, USA TEL: (510) 771-1000 FAX: (510) 661-0888
This report shall not be reproduced except in full, without the written approval of UL Verification Services Inc.

Band 5

HSDPA

UL Verification Services, Inc.
Above 1GHz High Frequency Substitution Measurement

Company: Sony
Project #: 15U19770
Date: 03/10/15
Test Engineer: K.Kedida
Configuration: EUT only Y position
Mode: WCDMA_HSDPA_B5_HARM

Chamber	Pre-amplifer	Filter	Limit
3m Chamber	T34 8449B	Filter 1	Part 22

f GHz	SG reading (dBm)	Ant. Pol. (H/V)	Distance (m)	Preamp (dB)	Filter (dB)	EIRP (dBm)	Limit (dBm)	Delta (dB)	Notes
Low Ch, 824.2MHz									
1.648	-24.6	V	3.0	37.4	1.0	-61.0	-13.0	-48.0	
2.473	-21.6	V	3.0	36.4	1.0	-57.0	-13.0	-44.0	
3.297	-21.8	V	3.0	35.8	1.0	-56.6	-13.0	-43.6	
1.648	-20.8	H	3.0	37.4	1.0	-57.2	-13.0	-44.2	
2.473	-20.4	H	3.0	36.4	1.0	-55.8	-13.0	-42.8	
3.297	-20.1	H	3.0	35.8	1.0	-54.9	-13.0	-41.9	
Mid Ch, 836.6MHz									
1.673	-23.7	V	3.0	37.3	1.0	-60.0	-13.0	-47.0	
2.510	-23.5	V	3.0	36.4	1.0	-58.8	-13.0	-45.8	
3.346	-21.0	V	3.0	35.8	1.0	-55.7	-13.0	-42.7	
1.673	-19.5	H	3.0	37.3	1.0	-55.8	-13.0	-42.8	
2.510	-20.1	H	3.0	36.4	1.0	-55.4	-13.0	-42.4	
3.346	-21.3	H	3.0	35.8	1.0	-56.0	-13.0	-43.0	
High Ch, 848.8MHz									
1.698	-24.4	V	3.0	37.3	1.0	-60.7	-13.0	-47.7	
2.547	-22.3	V	3.0	36.3	1.0	-57.6	-13.0	-44.6	
3.395	-21.2	V	3.0	35.7	1.0	-55.9	-13.0	-42.9	
1.698	-21.4	H	3.0	37.3	1.0	-57.7	-13.0	-44.7	
2.547	-24.1	H	3.0	36.3	1.0	-59.5	-13.0	-46.5	
3.395	-21.6	H	3.0	35.7	1.0	-56.3	-13.0	-43.3	

Rev. 03.03.09
Note: No other emissions were detected above the system noise floor.

UL VERIFICATION SERVICES INC. FORM NO: CCSUP4701I
47173 BENICIA STREET, FREMONT, CA 94538, USA TEL: (510) 771-1000 FAX: (510) 661-0888

This report shall not be reproduced except in full, without the written approval of UL Verification Services Inc.

UL Verification Services, Inc.
Above 1GHz High Frequency Substitution Measurement

Company: Sony
Project #: 15U19770
Date: 03/10/15
Test Engineer: K.Kedida
Configuration: EUT w/ HS + AC adaptor Y position
Mode: EGPRS1900 HARM

Chamber	Pre-amplifer	Filter	Limit
3m Chamber	T34 8449B	Filter 1	Part 22

Band	f GHz	SG reading (dBm)	Ant. Pol. (H/V)	Distance (m)	Preamp (dB)	Filter (dB)	EIRP (dBm)	Limit (dBm)	Delta (dB)	Notes
	Low Ch, 1850.2MHz									
GSM 1900 EGPRS	3.700	-17.4	V	3.0	35.4	1.0	-51.8	-13.0	-38.8	
	5.551	-16.0	V	3.0	34.7	1.0	-49.7	-13.0	-36.7	
	7.370	-14.1	V	3.0	34.9	1.0	-48.0	-13.0	-35.0	
	3.700	-18.5	H	3.0	35.4	1.0	-52.9	-13.0	-39.9	
	5.551	-14.9	H	3.0	34.7	1.0	-48.6	-13.0	-35.6	
	7.370	-12.2	H	3.0	34.9	1.0	-46.1	-13.0	-33.1	
	Mid Ch, 1880.0MHz									
	3.759	-16.8	V	3.0	35.3	1.0	-51.1	-13.0	-38.1	
	5.640	-15.3	V	3.0	34.7	1.0	-49.0	-13.0	-36.0	
	7.520	-14.1	V	3.0	34.9	1.0	-48.0	-13.0	-35.0	
	3.759	-16.8	H	3.0	35.3	1.0	-51.2	-13.0	-38.2	
	5.640	-15.3	H	3.0	34.7	1.0	-49.0	-13.0	-36.0	
	7.520	-12.2	H	3.0	34.9	1.0	-46.1	-13.0	-33.1	
	High Ch, 1909.8MHz									
	3.820	-17.1	V	3.0	35.3	1.0	-51.4	-13.0	-38.4	
	5.729	-15.3	V	3.0	34.7	1.0	-49.0	-13.0	-36.0	
	7.663	-13.8	V	3.0	35.0	1.0	-47.8	-13.0	-34.8	
	3.820	-16.5	H	3.0	35.3	1.0	-50.7	-13.0	-37.7	
	5.729	-14.5	H	3.0	34.7	1.0	-48.2	-13.0	-35.2	
	7.663	-12.4	H	3.0	35.0	1.0	-46.4	-13.0	-33.4	

Rev. 03.03.09
Note: No other emissions were detected above the system noise floor.

UL VERIFICATION SERVICES INC. FORM NO: CCSUP4701I
47173 BENICIA STREET, FREMONT, CA 94538, USA TEL: (510) 771-1000 FAX: (510) 661-0888
This report shall not be reproduced except in full, without the written approval of UL Verification Services Inc.

UL Verification Services, Inc.
Above 1GHz High Frequency Substitution Measurement

Company: Sony
Project #: 15U19770
Date: 3/10/2015
Test Engineer: K.Kedida
Configuration: x-pos EUT/AC Charge
Mode: GPRS1900

Chamber	Pre-amplifer	Filter	Limit
5m Chamber B	T34 8449B	Filter 1	Part 24

Band	f GHz	SG reading (dBm)	Ant. Pol. (H/V)	Distance (m)	Preamp (dB)	Filter (dB)	EIRP (dBm)	Limit (dBm)	Delta (dB)	Notes
	Low Ch, 1850.2MHz									
GSM 1900	3.700	-14.8	V	3.0	35.4	1.0	-49.2	-13.0	-36.2	
	5.551	-15.1	V	3.0	34.7	1.0	-48.8	-13.0	-35.8	
	7.401	-14.1	V	3.0	34.9	1.0	-48.0	-13.0	-35.0	
GPRS	3.700	-15.8	H	3.0	35.4	1.0	-50.2	-13.0	-37.2	
	5.551	-14.8	H	3.0	34.7	1.0	-48.5	-13.0	-35.5	
	7.401	-12.8	H	3.0	34.9	1.0	-46.7	-13.0	-33.7	
	Mid Ch, 1880.0MHz									
	3.760	-15.4	V	3.0	35.3	1.0	-49.7	-13.0	-36.7	
	5.640	-14.3	V	3.0	34.7	1.0	-48.0	-13.0	-35.0	
	7.520	-13.6	V	3.0	34.9	1.0	-47.5	-13.0	-34.5	
	3.760	-15.4	H	3.0	35.3	1.0	-49.8	-13.0	-36.8	
	5.640	-14.5	H	3.0	34.7	1.0	-48.2	-13.0	-35.2	
	7.520	-12.3	H	3.0	34.9	1.0	-46.2	-13.0	-33.2	
	High Ch, 1909.8MHz									
	3.820	-16.1	V	3.0	35.3	1.0	-50.4	-13.0	-37.4	
	5.729	-13.9	V	3.0	34.7	1.0	-47.6	-13.0	-34.6	
	7.639	-13.5	V	3.0	35.0	1.0	-47.5	-13.0	-34.5	
	3.820	-14.9	H	3.0	35.3	1.0	-49.1	-13.0	-36.1	
	5.729	-13.1	H	3.0	34.7	1.0	-46.9	-13.0	-33.9	
	7.639	-11.8	H	3.0	35.0	1.0	-45.7	-13.0	-32.7	

Rev. 03.03.09
Note: No other emissions were detected above the system noise floor.

UL VERIFICATION SERVICES INC. FORM NO: CCSUP4701I
47173 BENICIA STREET, FREMONT, CA 94538, USA TEL: (510) 771-1000 FAX: (510) 661-0888
This report shall not be reproduced except in full, without the written approval of UL Verification Services Inc.

UL Verification Services, Inc.
Above 1GHz High Frequency Substitution Measurement

Company: Sony
Project #: 15U19770
Date: 03/10/15
Test Engineer: K.Kedida
Configuration: EUT w/ HS + AC adaptor Y position
Mode: EGPRS850 HARM

Chamber	Pre-amplifer	Filter	Limit
3m Chamber	T34 8449B	Filter 1	Part 22

Band

GSM 850

EGPRS

f GHz	SG reading (dBm)	Ant. Pol. (H/V)	Distance (m)	Preamp (dB)	Filter (dB)	EIRP (dBm)	Limit (dBm)	Delta (dB)	Notes
Low Ch, 824.2MHz									
1.648	-20.6	V	3.0	37.4	1.0	-56.9	-13.0	-43.9	
2.473	-22.9	V	3.0	36.4	1.0	-58.3	-13.0	-45.3	
3.297	-20.9	V	3.0	35.8	1.0	-55.7	-13.0	-42.7	
1.648	-24.6	H	3.0	37.4	1.0	-61.0	-13.0	-48.0	
2.473	-23.7	H	3.0	36.4	1.0	-59.1	-13.0	-46.1	
3.297	-21.4	H	3.0	35.8	1.0	-56.2	-13.0	-43.2	
Mid Ch, 836.6MHz									
1.673	-21.1	V	3.0	37.3	1.0	-57.5	-13.0	-44.5	
2.510	-22.8	V	3.0	36.4	1.0	-58.1	-13.0	-45.1	
3.346	-21.5	V	3.0	35.8	1.0	-56.2	-13.0	-43.2	
1.673	-23.4	H	3.0	37.3	1.0	-59.7	-13.0	-46.7	
2.510	-24.4	H	3.0	36.4	1.0	-59.7	-13.0	-46.7	
3.346	-22.4	H	3.0	35.8	1.0	-57.2	-13.0	-44.2	
High Ch, 848.8MHz									
1.698	-20.0	V	3.0	37.3	1.0	-56.3	-13.0	-43.3	
2.547	-21.8	V	3.0	36.3	1.0	-57.1	-13.0	-44.1	
3.395	-21.3	V	3.0	35.7	1.0	-56.0	-13.0	-43.0	
1.698	-24.0	H	3.0	37.3	1.0	-60.3	-13.0	-47.3	
2.547	-24.0	H	3.0	36.3	1.0	-59.3	-13.0	-46.3	
3.395	-21.7	H	3.0	35.7	1.0	-56.4	-13.0	-43.4	

Rev. 03.03.09
Note: No other emissions were detected above the system noise floor.

This report shall not be reproduced except in full, without the written approval of UL Verification Services Inc.

UL Verification Services, Inc.
Above 1GHz High Frequency Substitution Measurement

Company: Sony
Project #: 15U19770
Date: 03/10/15
Test Engineer: K.Kedida
Configuration: x-pos EUT/AC Charge
Mode: GPRS850 HARM

Chamber	Pre-amplifer	Filter	Limit
3m Chamber	T34 8449B	Filter 1	Part 22

Band	f GHz	SG reading (dBm)	Ant. Pol. (H/V)	Distance (m)	Preamp (dB)	Filter (dB)	EIRP (dBm)	Limit (dBm)	Delta (dB)	Notes
	Low Ch, 824.2MHz									
GSM 850	1.648	-19.6	V	3.0	37.4	1.0	-56.0	-13.0	-43.0	
	2.473	-22.2	V	3.0	36.4	1.0	-57.6	-13.0	-44.6	
	3.297	-21.4	V	3.0	35.8	1.0	-56.2	-13.0	-43.2	
	1.648	-23.5	H	3.0	37.4	1.0	-59.9	-13.0	-46.9	
	2.473	-24.5	H	3.0	36.4	1.0	-59.9	-13.0	-46.9	
	3.297	-21.8	H	3.0	35.8	1.0	-56.6	-13.0	-43.6	
	Mid Ch, 836.6MHz									
GPRS	1.673	-20.3	V	3.0	37.3	1.0	-56.6	-13.0	-43.6	
	2.510	-21.8	V	3.0	36.4	1.0	-57.1	-13.0	-44.1	
	3.346	-20.7	V	3.0	35.8	1.0	-55.4	-13.0	-42.4	
	1.673	-23.1	H	3.0	37.3	1.0	-59.4	-13.0	-46.4	
	2.510	-23.5	H	3.0	36.4	1.0	-58.8	-13.0	-45.8	
	3.346	-21.9	H	3.0	35.8	1.0	-56.6	-13.0	-43.6	
	High Ch, 848.8MHz									
	1.698	-18.8	V	3.0	37.3	1.0	-55.1	-13.0	-42.1	
	2.547	-21.1	V	3.0	36.3	1.0	-56.4	-13.0	-43.4	
	3.395	-20.7	V	3.0	35.7	1.0	-55.4	-13.0	-42.4	
	1.698	-22.4	H	3.0	37.3	1.0	-58.7	-13.0	-45.7	
	2.547	-24.4	H	3.0	36.3	1.0	-59.7	-13.0	-46.7	
	3.395	-21.6	H	3.0	35.7	1.0	-56.3	-13.0	-43.3	

Rev. 03.03.09
Note: No other emissions were detected above the system noise floor.

UL VERIFICATION SERVICES INC. FORM NO: CCSUP4701I
47173 BENICIA STREET, FREMONT, CA 94538, USA TEL: (510) 771-1000 FAX: (510) 661-0888
This report shall not be reproduced except in full, without the written approval of UL Verification Services Inc.