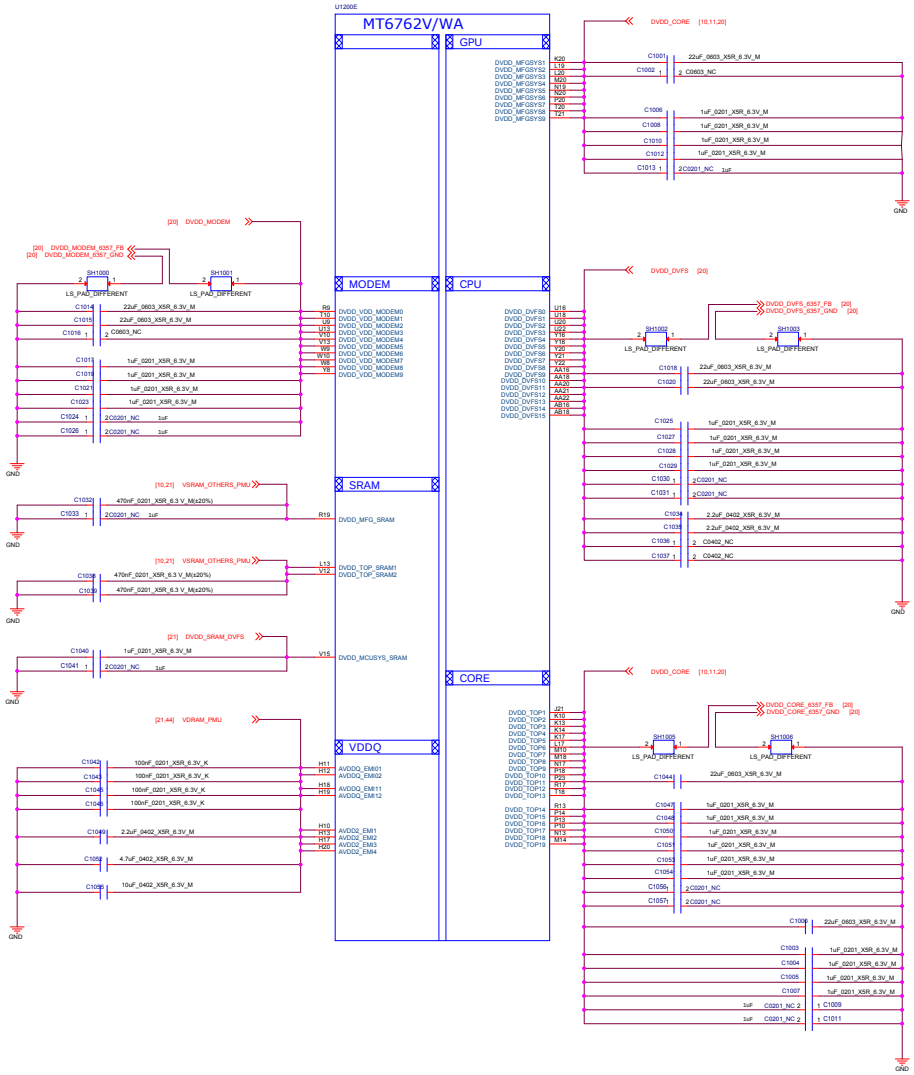

SoMC Mobile Communications, INC.		
Title	10_BB_POWER_PDN	
Size D	Project	Rev V5
Date: Friday, December 14, 2018	Sheet 10 of 99	

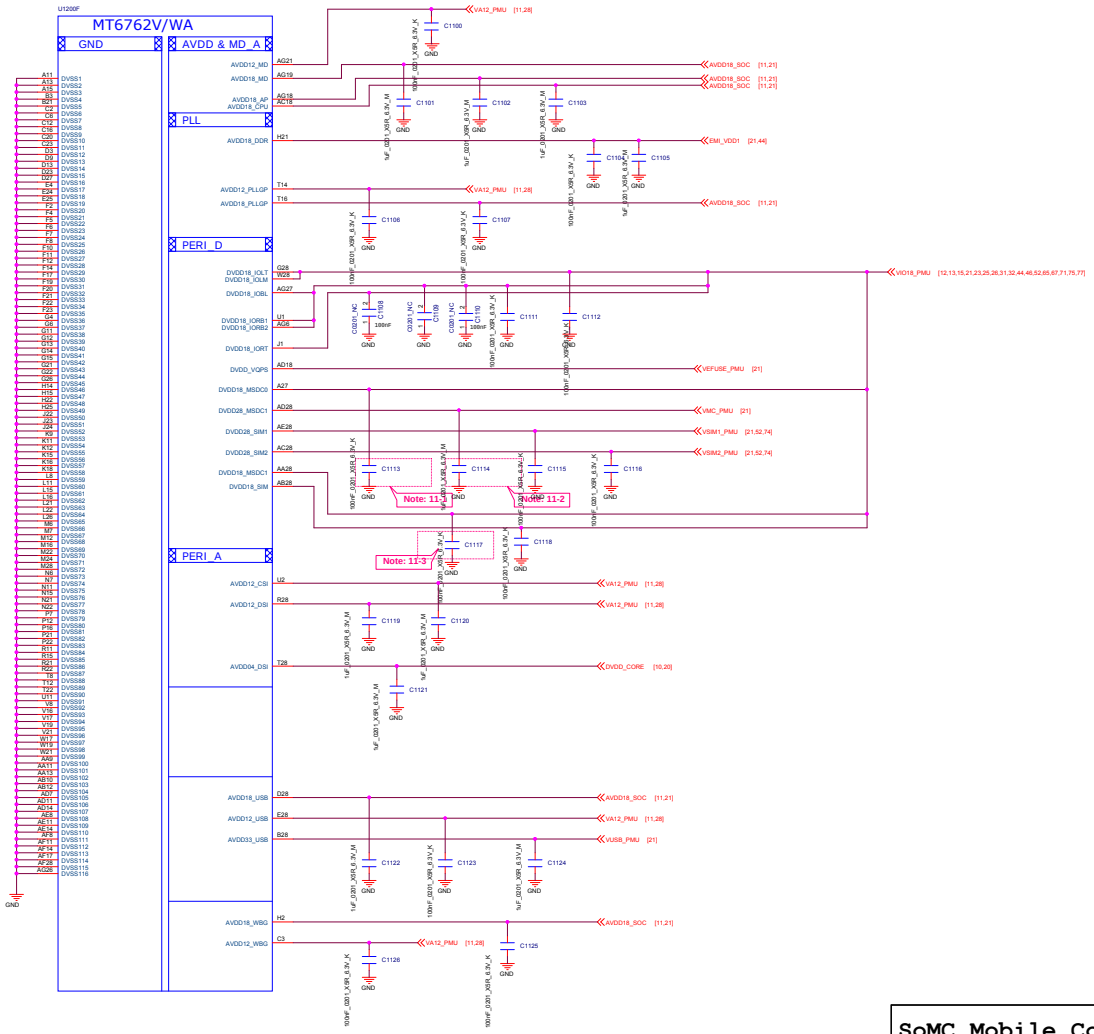

SoMC Mobile Communications, INC.		
Title 11_BB_POWER_IO		
Size D	Project	Rev V5
Date: Friday, December 14, 2018	Sheet 11 of 99	

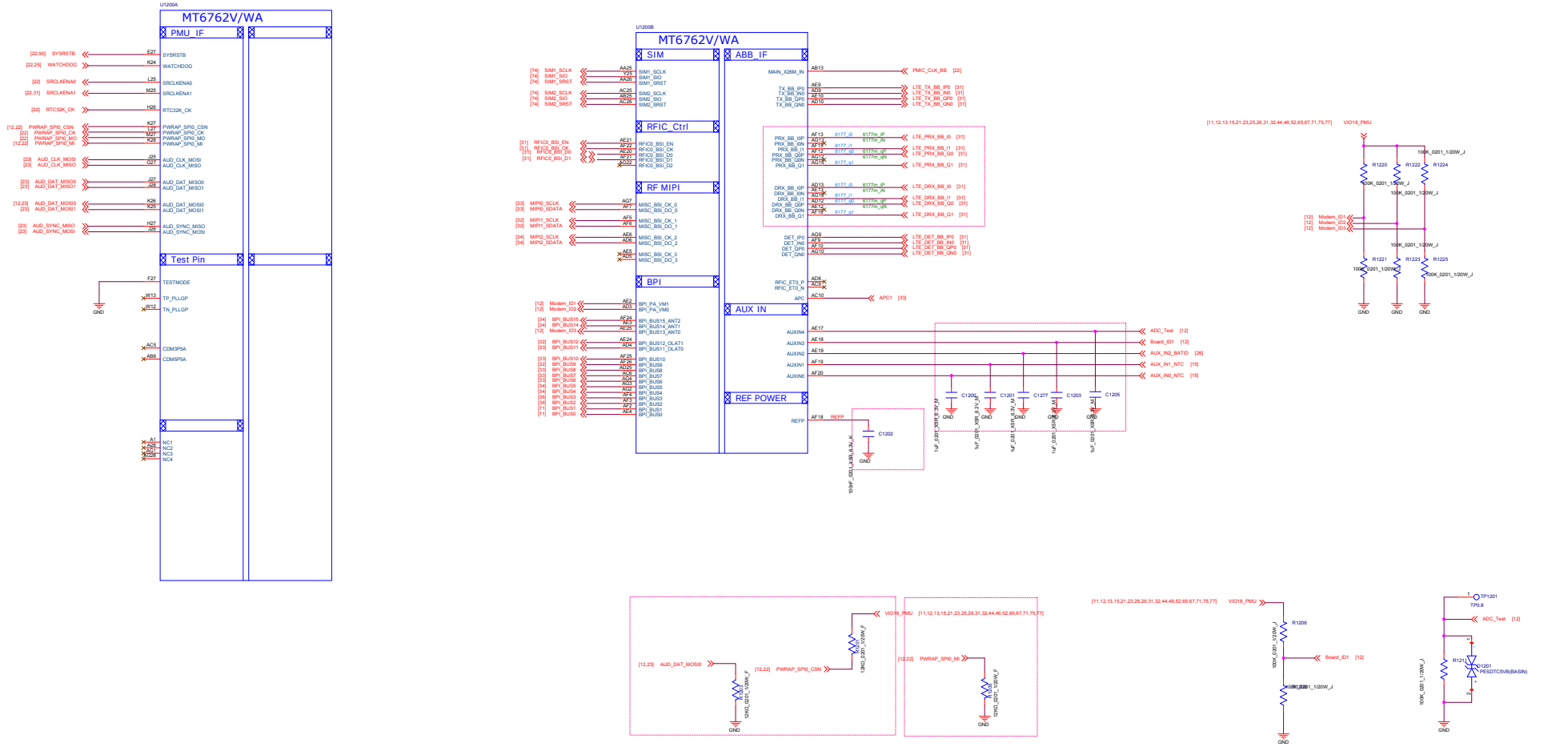

SoMC Mobile Communications, INC.		
Title 12_BB_1		
Size D	Project	Rev V5
Date: Friday, December 14, 2018	Sheet 12 of 99	

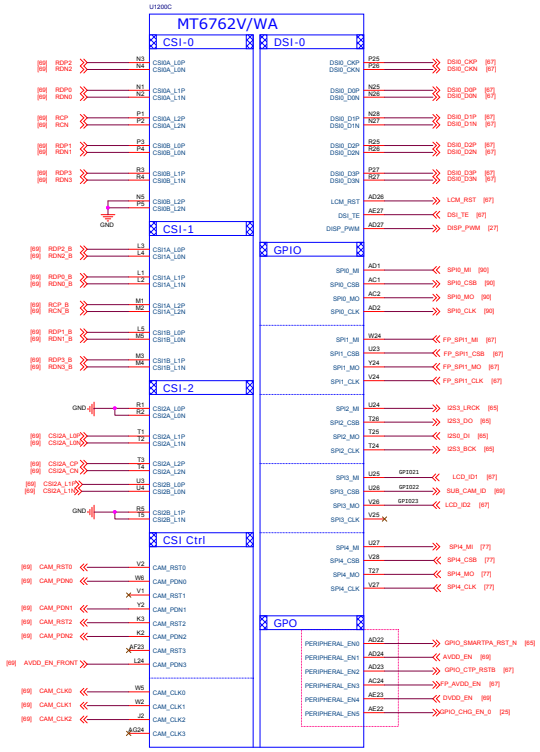

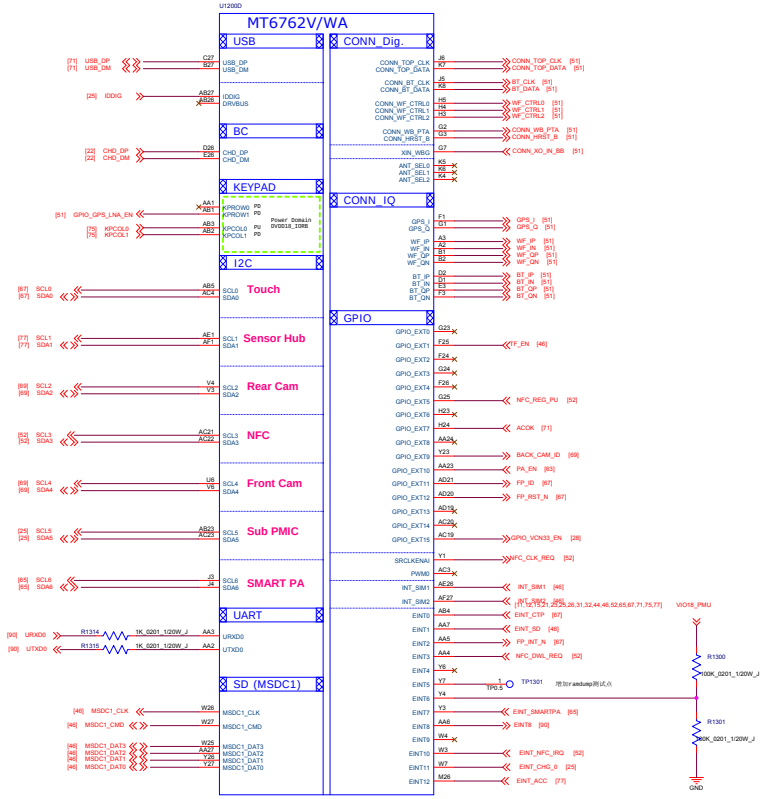

SoMC Mobile Communications, INC.		
Title 13_BB_2		
Size D	Project	Rev V5
Date: Friday, December 14, 2018	Sheet 13 of 99	

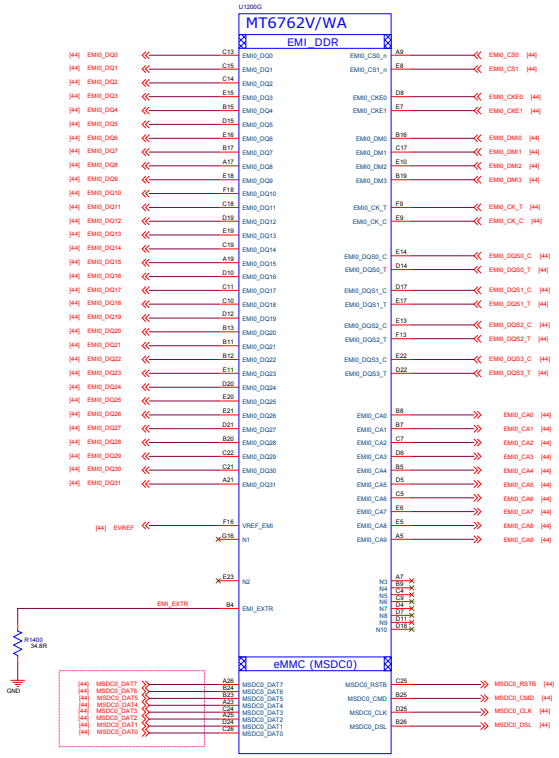

SoMC Mobile Communications, INC.		
Title 14_BB_3		
Size D	Project	Rev V5
Date: Friday, December 14, 2018	Sheet 14 of 99	

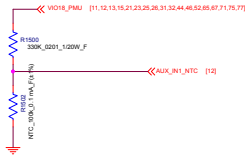

Thermistor / To sense board level temperature

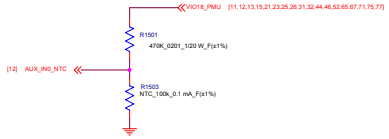

SoMC Mobile Communications, INC.		
Title 15_BB_AUXADC_Thermal		
Size D	Project	Rev V5
Date: Friday, December 14, 2018	Sheet 15 of 99	

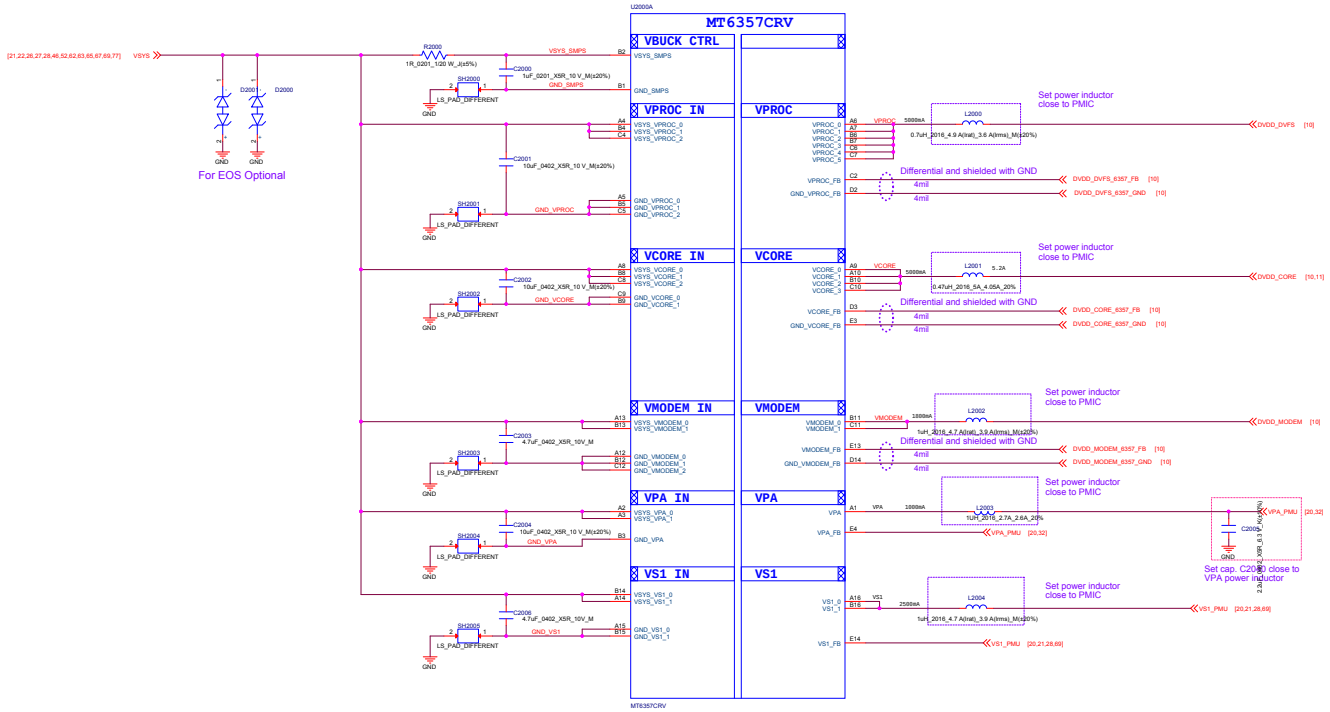

SoMC Mobile Communications, INC.		
Title	20_POWER_MT6357_Buck	
Size D	Project	Rev V5
Date: Friday, December 14, 2018	Sheet 20 of 99	

1. "Typical Cap" defined in design notice is the minimum cap. to LDO Cout.
2. NC cap can move to application, if (PCB L<20nH, PCB R<0.2 ohm)
=> value and placement of Cap, please refer design notice

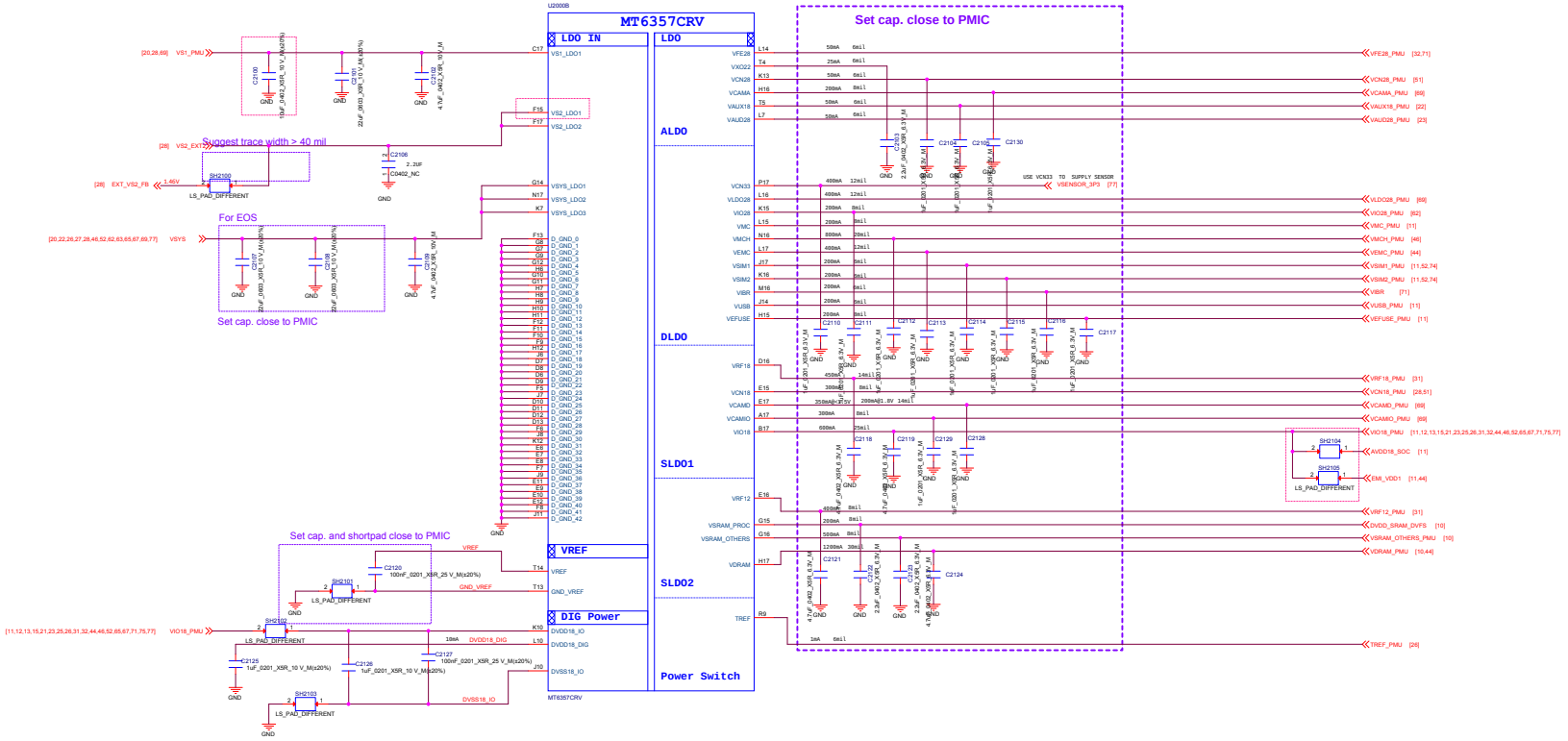

SoMC Mobile Communications, INC.		
Title 21_POWER_MT6357_LDO		
Size D	Project	Rev V5
Date: Friday, December 14, 2018	Sheet 21 of 99	

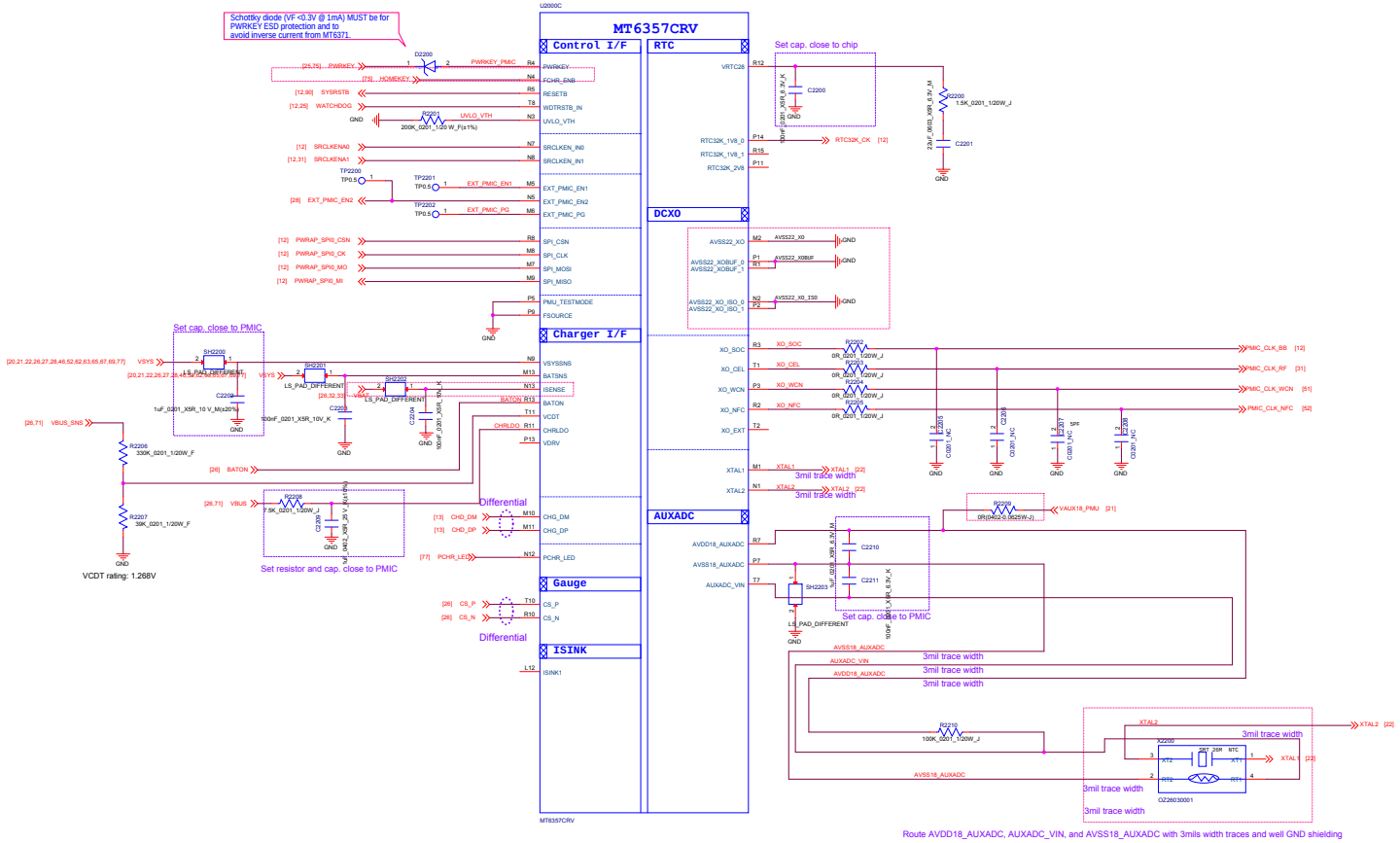

SoMC Mobile Communications, INC.		
Title 22_POWER_MT6357_IF		
Size D	Project	Rev V5
Date: Friday, December 14, 2018	Sheet 22 of 99	

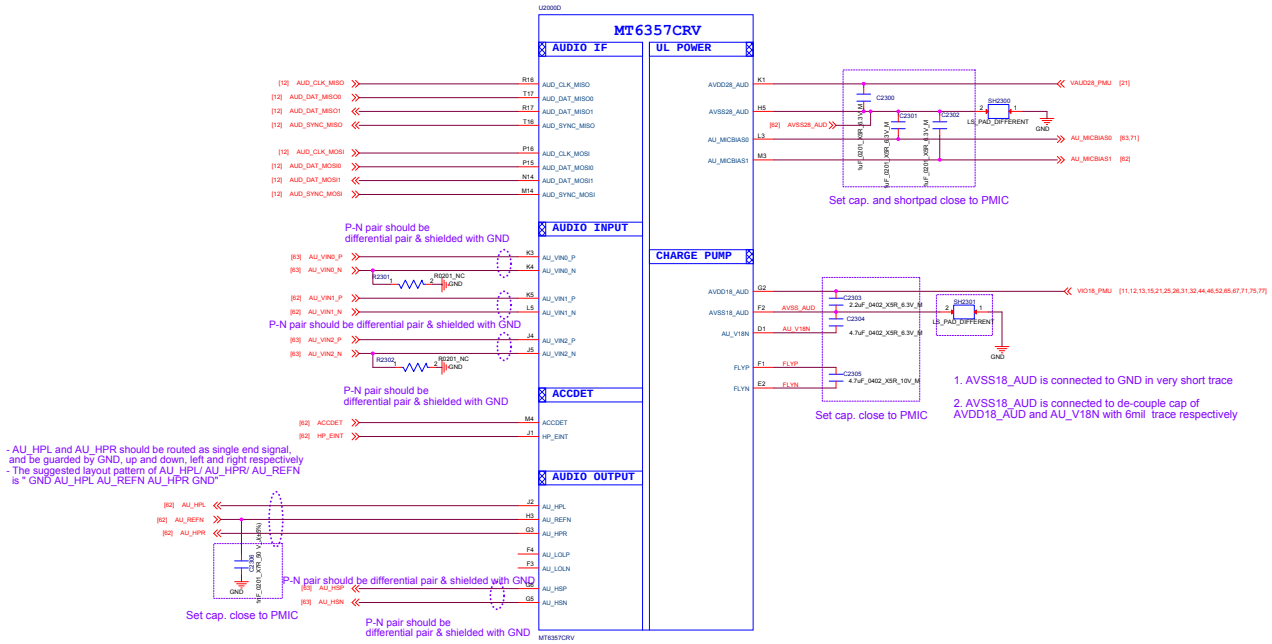

SoMC Mobile Communications, INC.		
Title	23_POWER_MT6357_Audio	
Size D	Project	Rev V5
Date: Friday, December 14, 2018	Sheet 23 of 99	

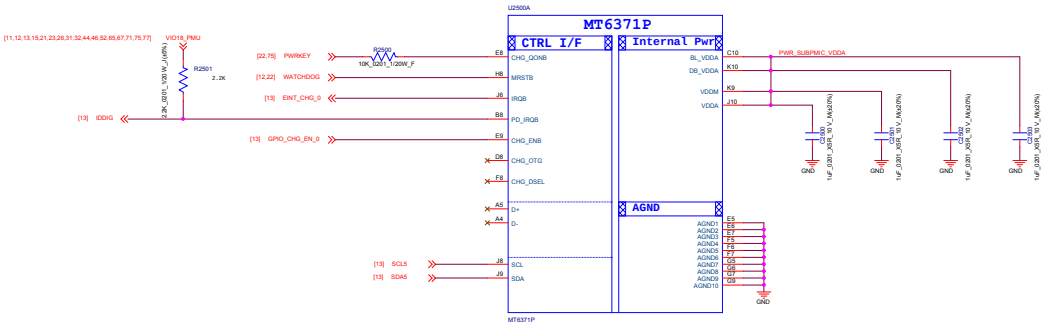

SoMC Mobile Communications, INC.		
Title 25_POWER_SubPMIC-General		
Size D	Project	Rev V5
Date: Friday, December 14, 2018	Sheet 25 of 99	

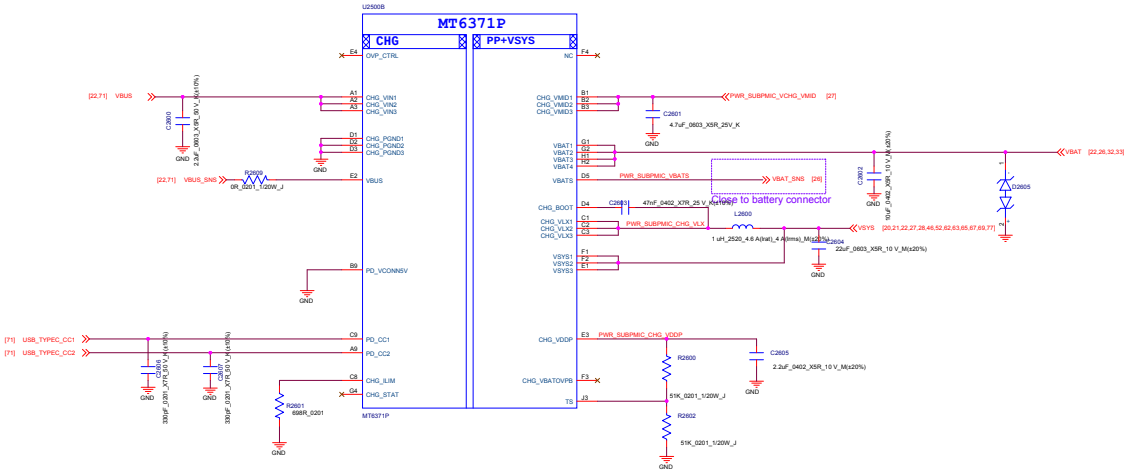

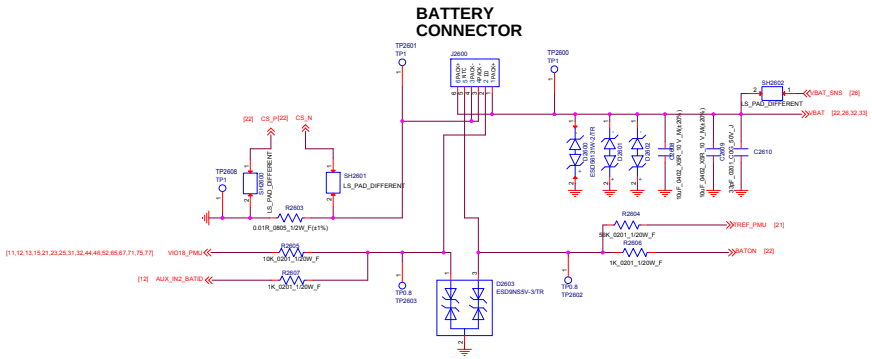

SoMC Mobile Communications, INC.		
Title	26_POWER_SubPMIC-Charger+CONN	
Size D	Project	Rev V5
Date: Friday, December 14, 2018	Sheet 26 of 99	

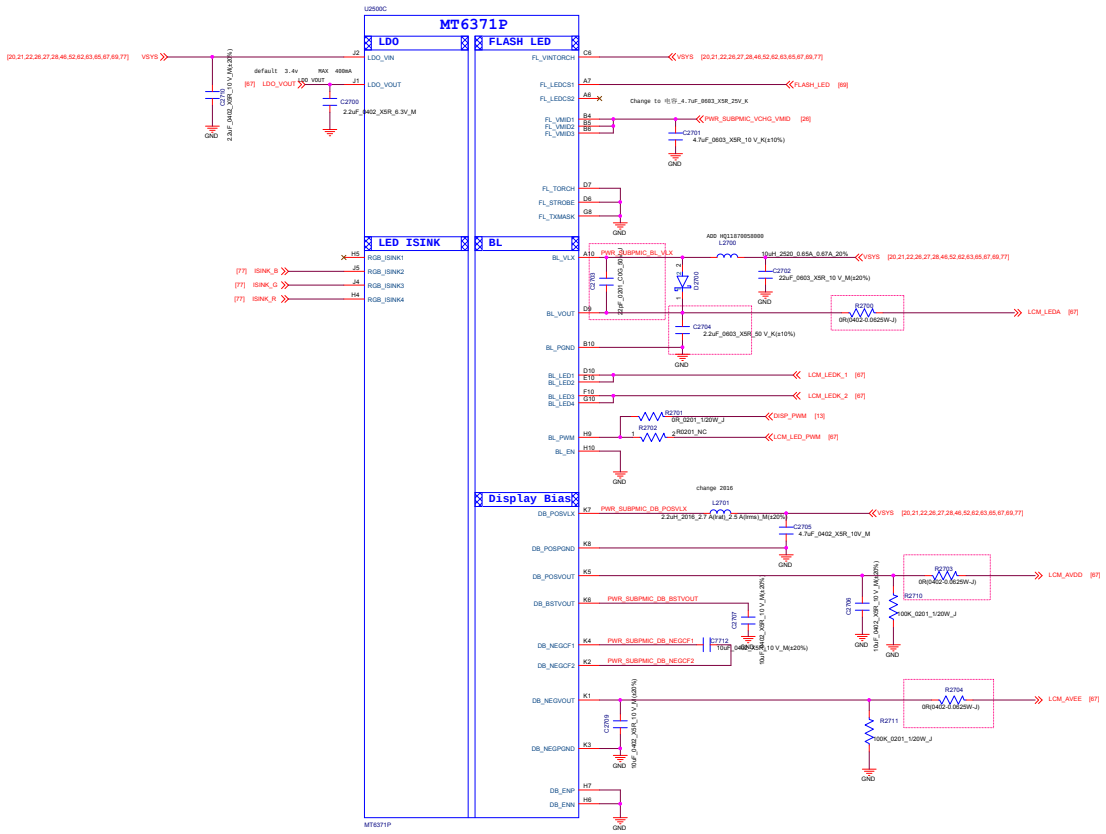

SoMC Mobile Communications, INC.		
Title	27_POWER_SubPMIC-HV powers	
Size D	Project	Rev V5
Date: Friday, December 14, 2018	Sheet 27 of 99	

LDO for VA12

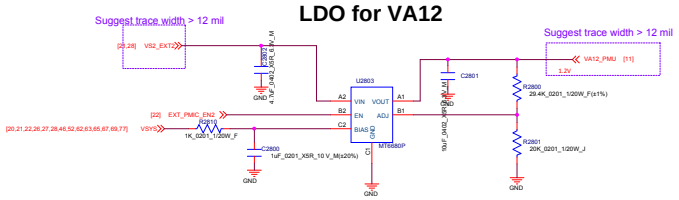

Ext. Bulk for VS2

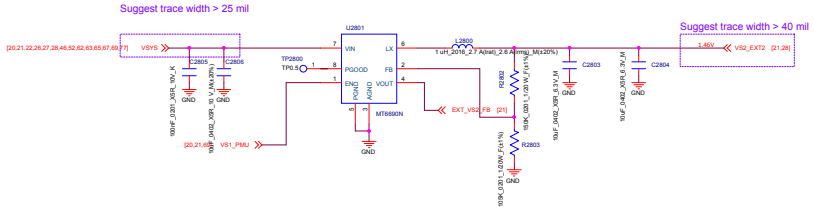

LDO for VCN33

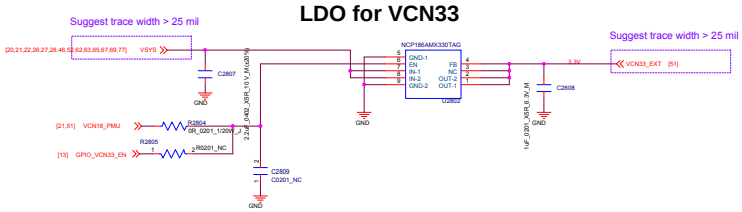

SoMC Mobile Communications, INC.		
Title	28_POWER_ThirdParty_Powers	
Size D	Project	Rev V5
Date: Friday, December 14, 2018	Sheet 28 of 99	

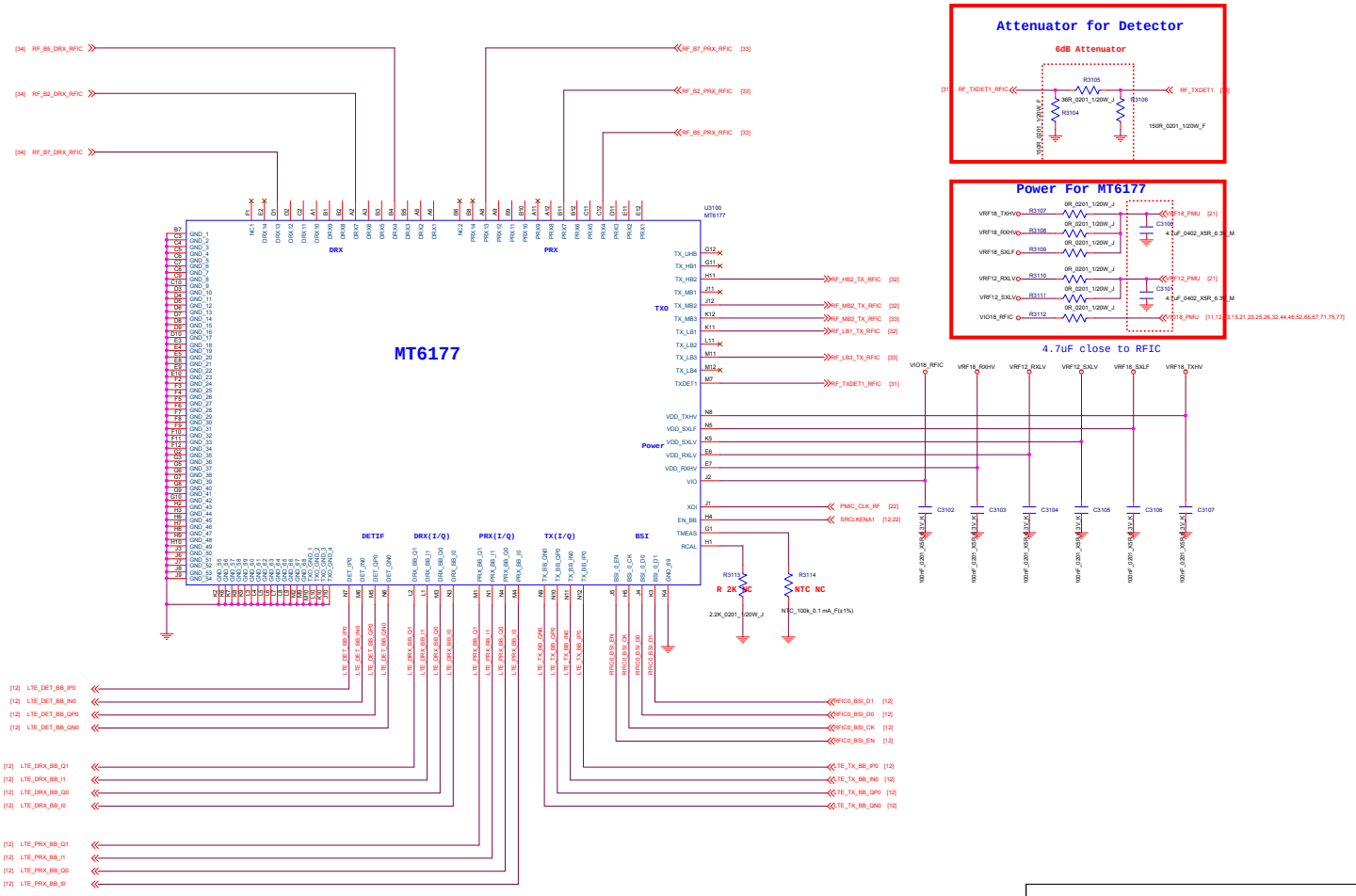

SoMC Mobile Communications, INC.		
Title 31_RF_MT6177_Pin_Out		
Size D	Project	Rev V5
Date: Friday, December 14, 2018	Sheet 31 of 99	

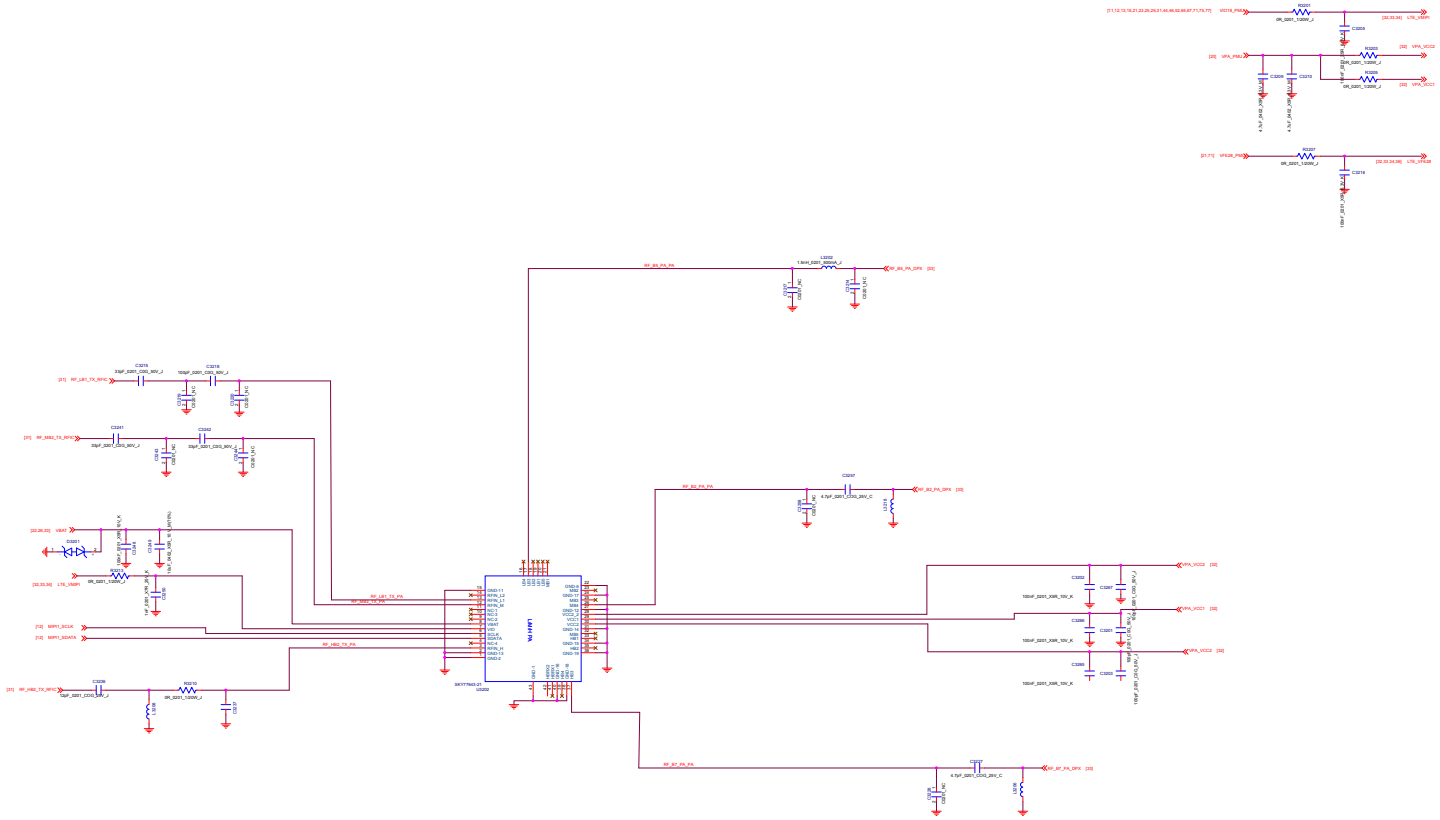

SoMC Mobile Communications, INC.		
Title	32_RF_MT6177_RF_TX	
Size E	Project	Rev V5
Date: Friday, December 14, 2018	Sheet 32 of 99	

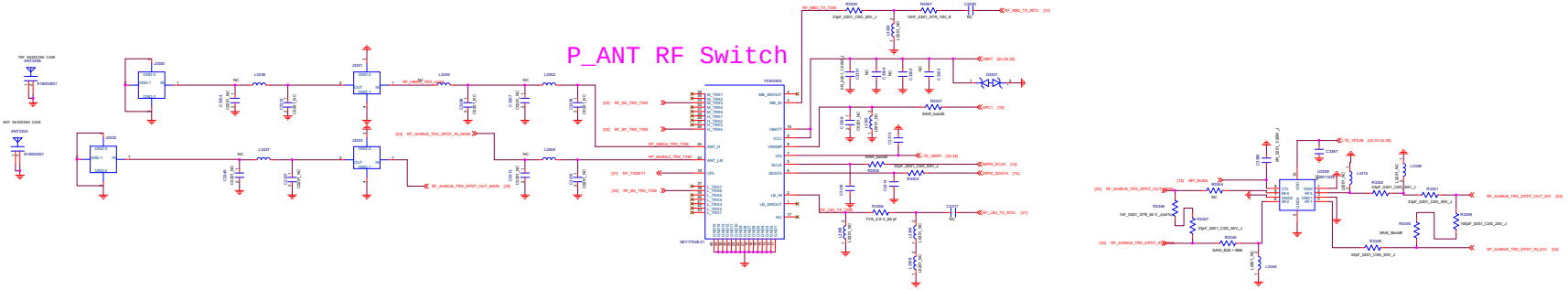

B5

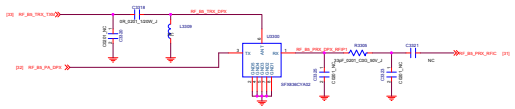

B7

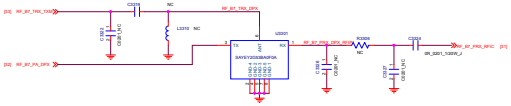

B2

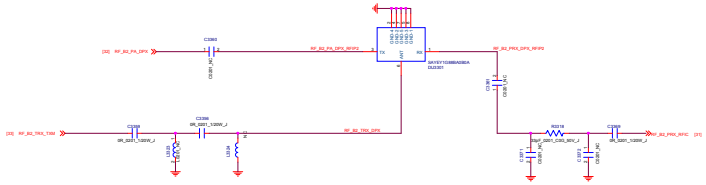

SoMC Mobile Communications, INC.		
Title	33_RF_MT6177_RF_PRX	
Size E	Project	Rev V5
Date: Friday, December 14, 2018	Sheet 33 of 99	

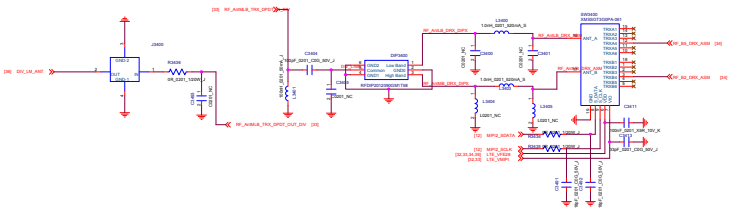

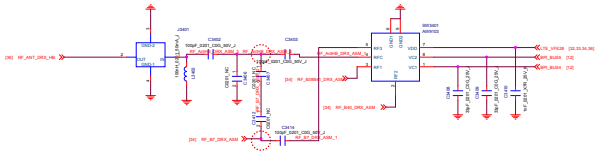

B2 DRX

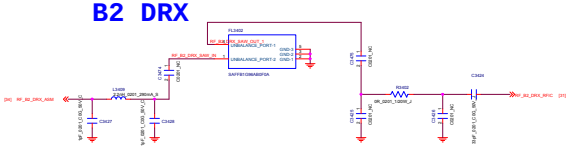

B5 DRX

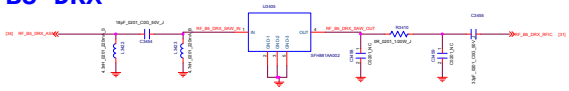

B7 DRX

SoMC Mobile Communications, INC.		
Title 34_RF_MT6177_RF_DRX		
Size E	Project	Rev V5
Date: Friday, December 14, 2018	Sheet 34 of 99	

WIFI/GPS_ANT

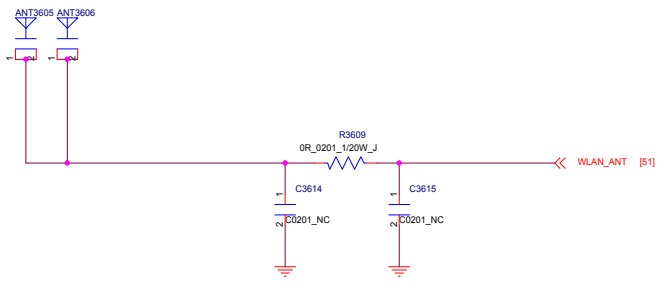

DRX_ANT_H

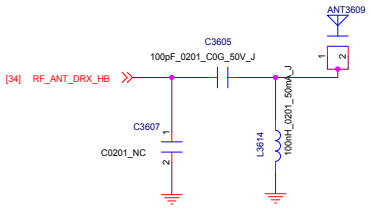

DRX_ANT_LM Tuner

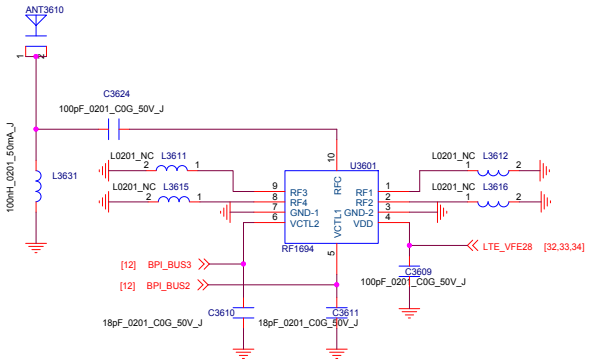

DRX_ANT_LM

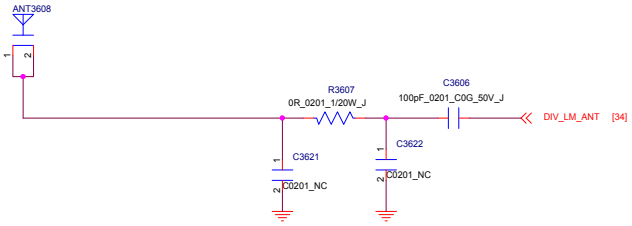

SoMC Mobile Communications, INC.		
Title 36_RF_ANT		
Size C	Project	Rev V5
Date: Friday, December 14, 2018	Sheet 36 of 99	

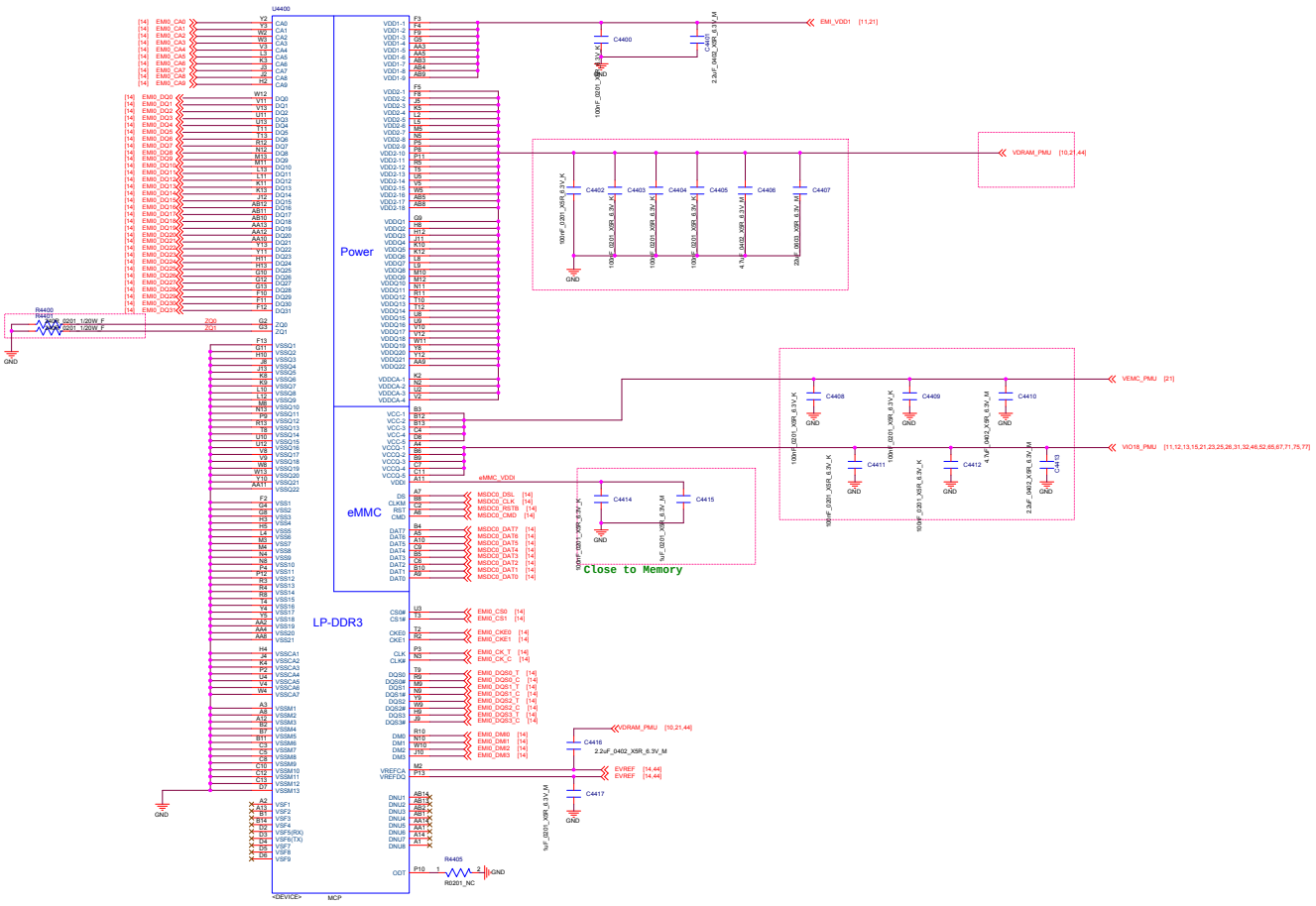

SoMC Mobile Communications, INC.		
Title	44_Memory_eMMC_LPDDR3	
Size D	Project	Rev V5
Date: Friday, December 14, 2018	Sheet 44 of 99	

SD CARD

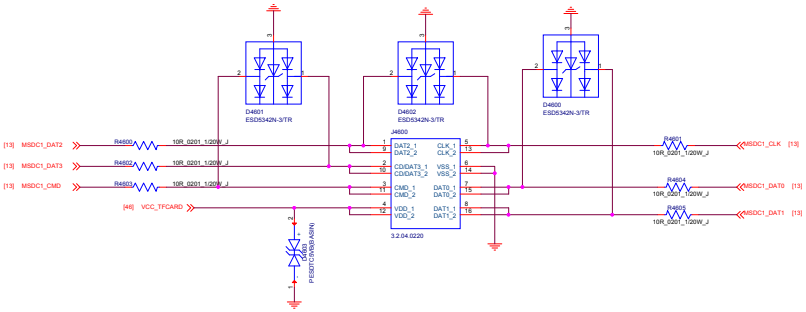

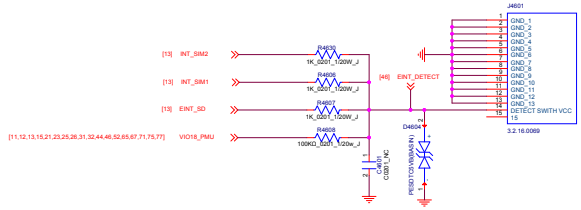

Fast Disacharge LDO

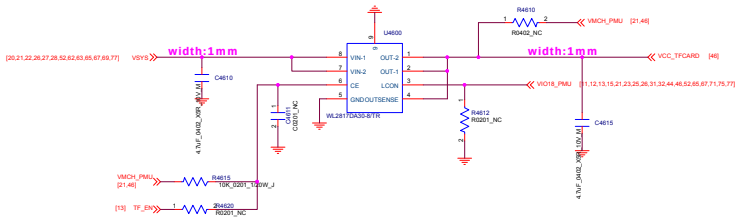

SoMC Mobile Communications, INC.		
Title 46_Memory_SD		
Size D	Project	Rev V5
Date: Friday, December 14, 2018	Sheet 46 of 99	

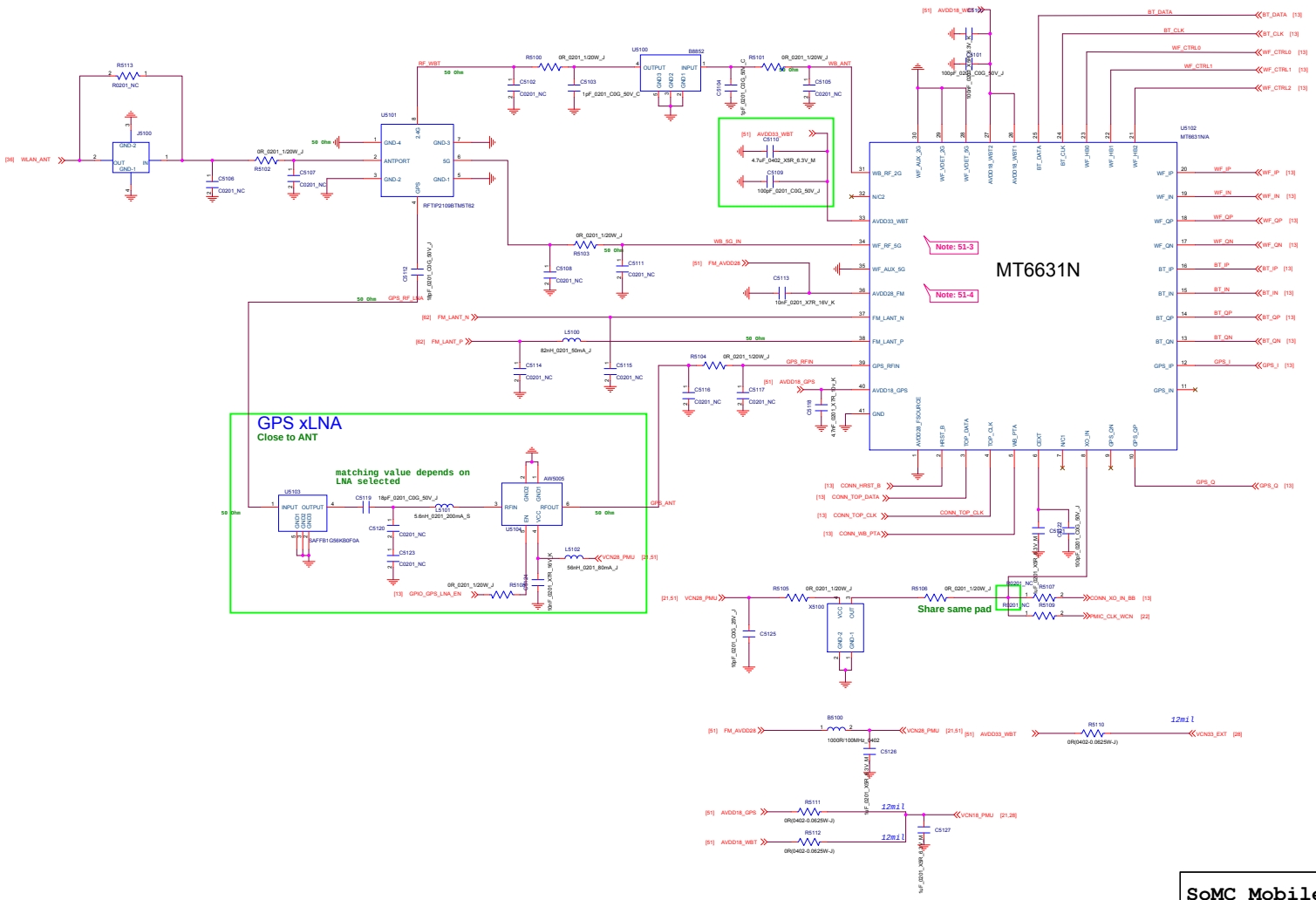

SoMC Mobile Communications, INC.		
Title	51_CONNECTIVITY_CONSYS_MT6631	
Size D	Project	Rev V5
Date: Friday, December 14, 2018	Sheet 51 of 99	

NFC

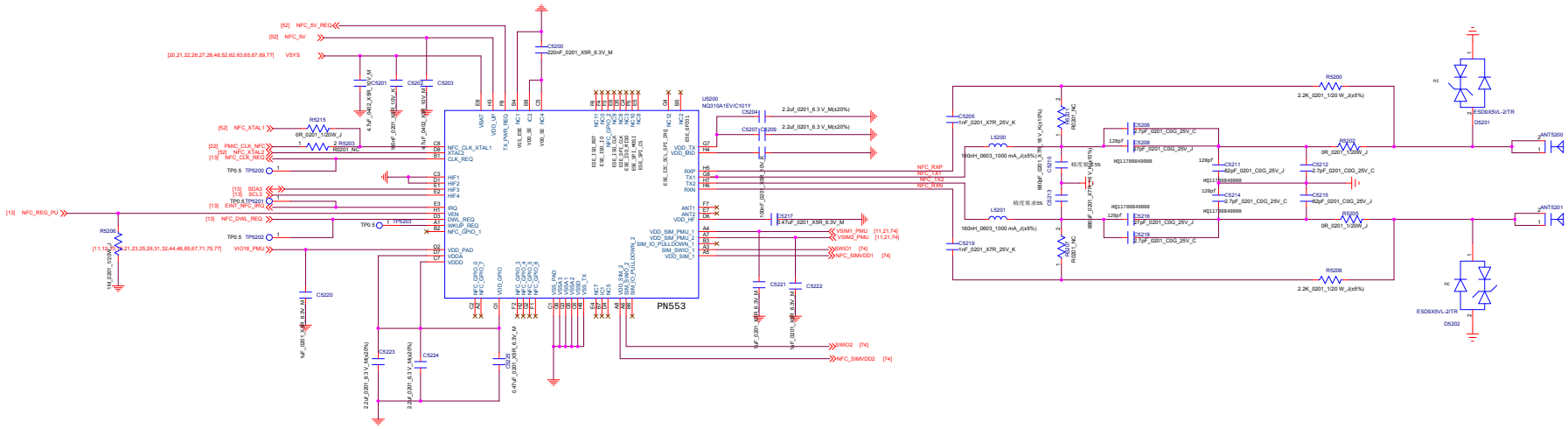

NFC DCDC

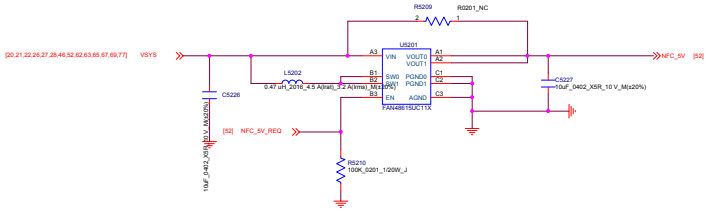

27.12MHz Crystal

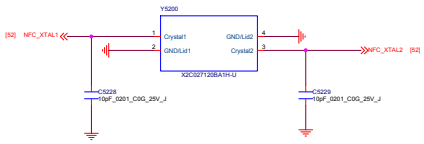

SoMC Mobile Communications, INC.		
Title	52_CONNECTIVITY_NFC	
Size D	Project	Rev V5
Date: Friday, December 14, 2018	Sheet 52 of 99	

Earphone Audio

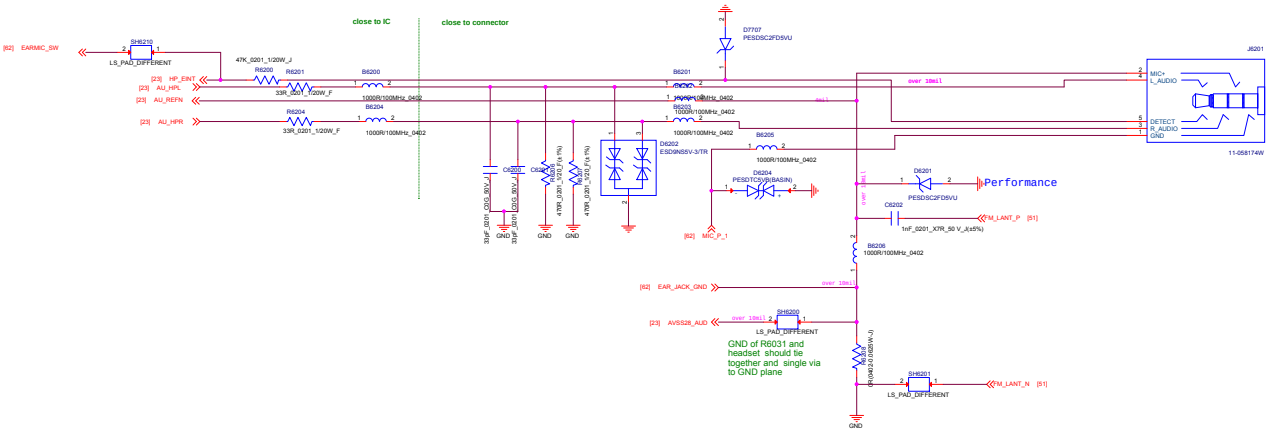

Earphone MICPHONE
ACC MODE

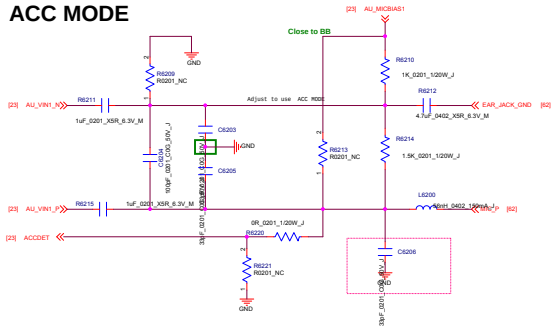

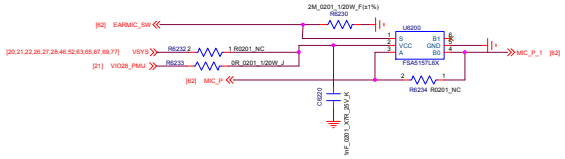

SoMC Mobile Communications, INC.		
Title 62_PERI_AUDIO_IO		
Size D	Project	Rev V5
Date: Friday, December 14, 2018	Sheet 62 of 99	

Receiver

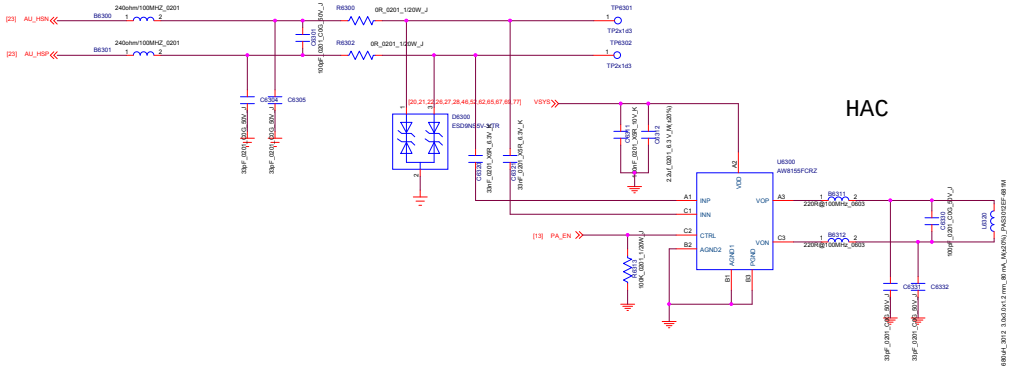

HAC

SUB MIC

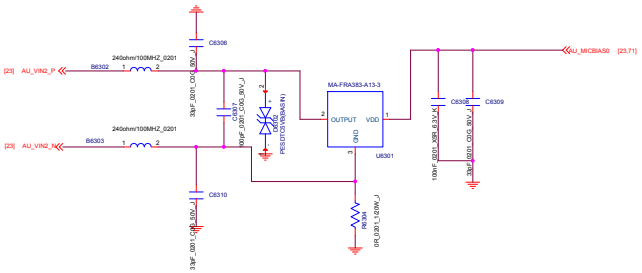

Main MIC

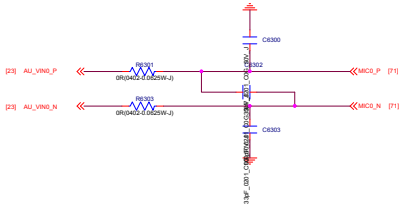

SoMC Mobile Communications, INC.		
Title	63_PERI_AUDIO_IO2(2 AMIC)	
Size D	Project	Rev V5
Date: Friday, December 14, 2018	Sheet 63 of 99	

Audio Smart PA

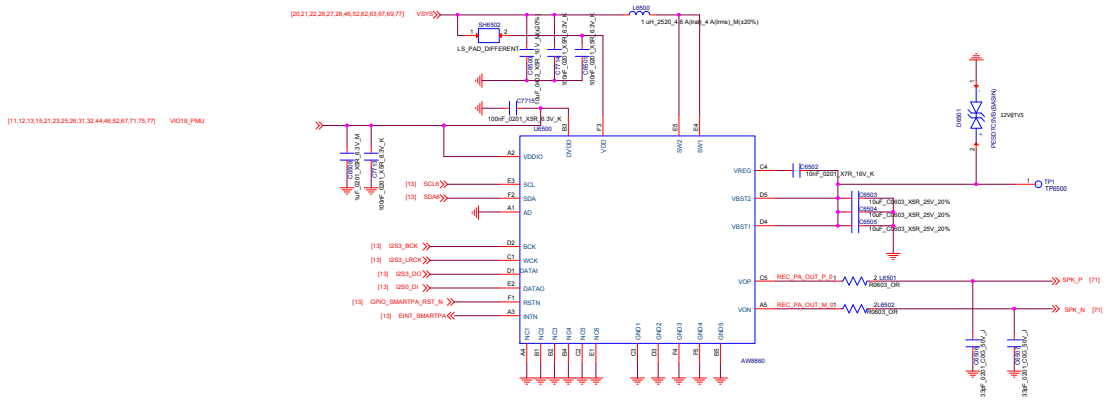

SoMC Mobile Communications, INC.		
Title 65_PERI_SPEAKER_AMP		
Size D	Project	Rev V5
Date: Friday, December 14, 2018	Sheet 65 of 99	

Main LCM+CTP incell

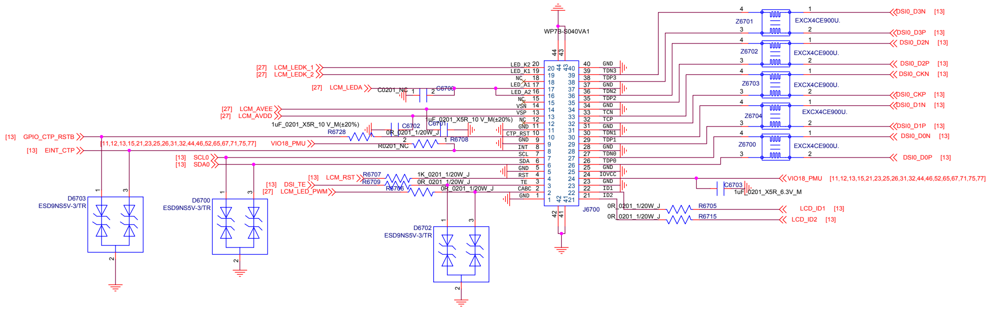

Finger Print

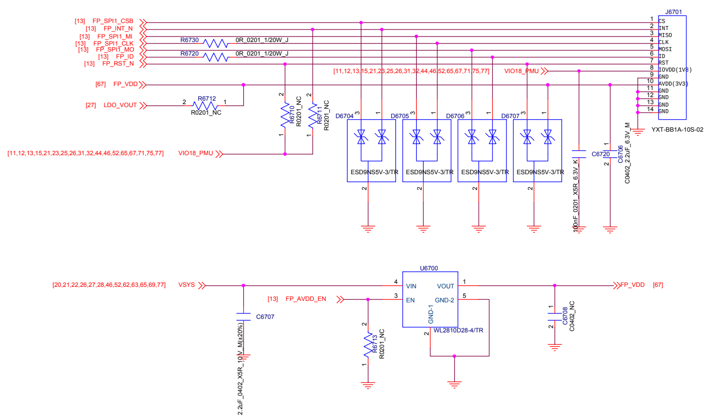

SoMC Mobile Communications, INC.			
Title	67_PERI_LCD_CTP_FP		
Size D	Project		Rev V5
Date:	Friday, December 14, 2018	Sheet 67 of 99	

BACK Camera - 13M

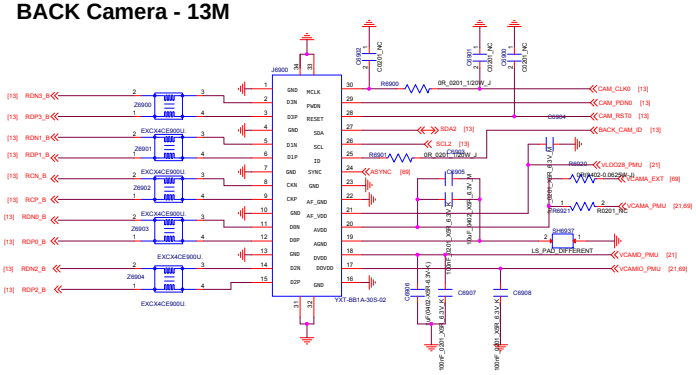

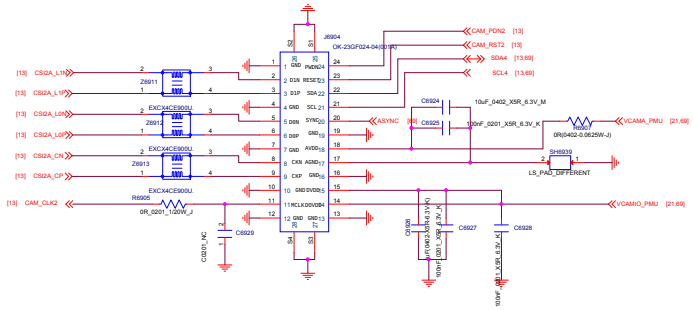

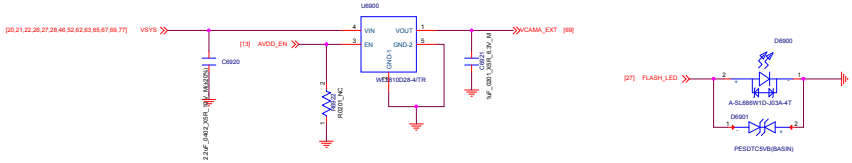

Front Camera - 8M

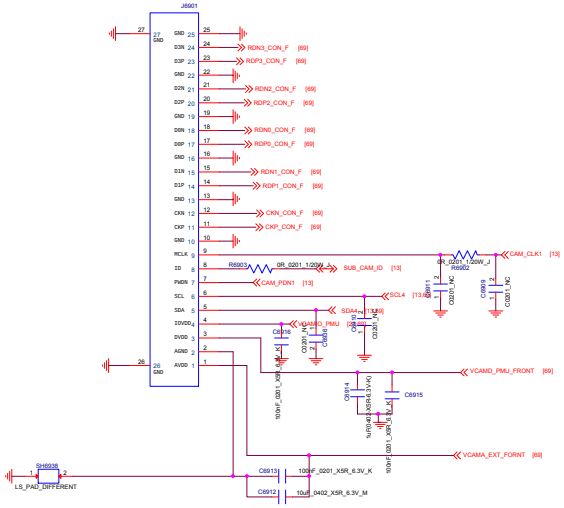

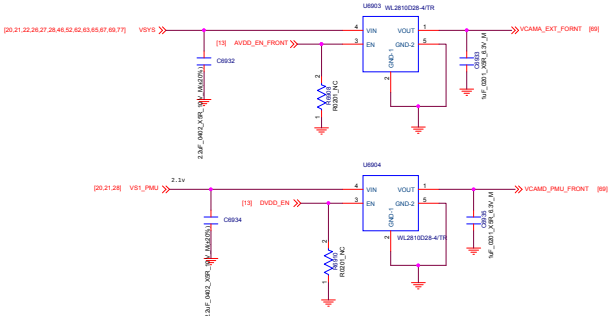

SoMC Mobile Communications, INC.		
Title	69_PERI_CAMERA	
Size D	Project	Rev V5
Date: Friday, December 14, 2018	Sheet 69 of 99	

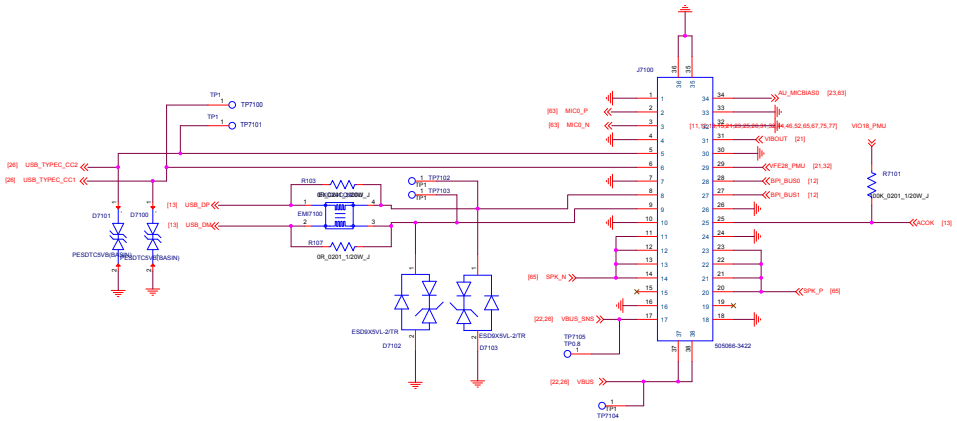

SoMC Mobile Communications, INC.		
Title 71_PERI_TYPEC_USB 2.0		
Size D	Project	Rev V5
Date: Friday, December 14, 2018	Sheet 71 of 99	

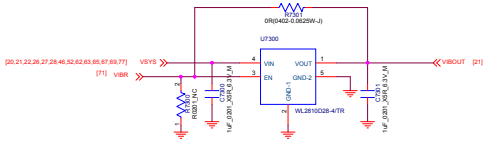

SoMC Mobile Communications, INC.		
Title 73_PERI_VIBRATOR		
Size D	Project	Rev V5
Date: Friday, December 14, 2018	Sheet 73 of 99	

SIM1/SIM2

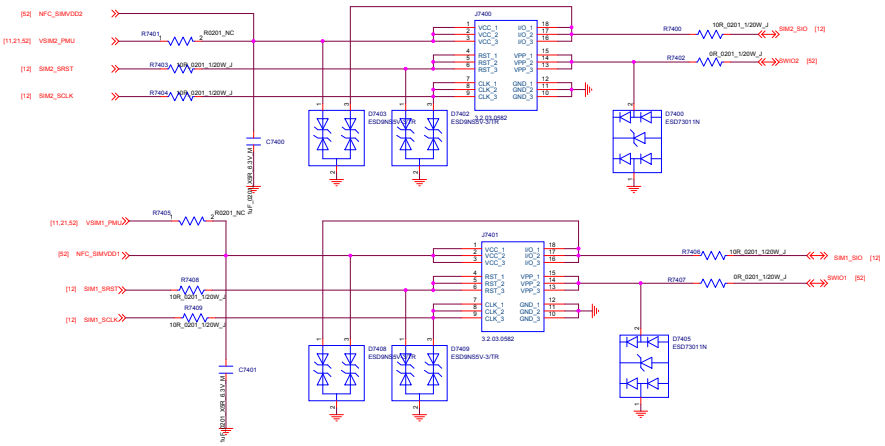

SoMC Mobile Communications, INC.		
Title 74_PERI_SIM		
Size D	Project	Rev V5
Date: Friday, December 14, 2018	Sheet 74 of 99	

Power Key / Key Pad

DO NOT put pull-up resistor on PWRKEY

Side Keys

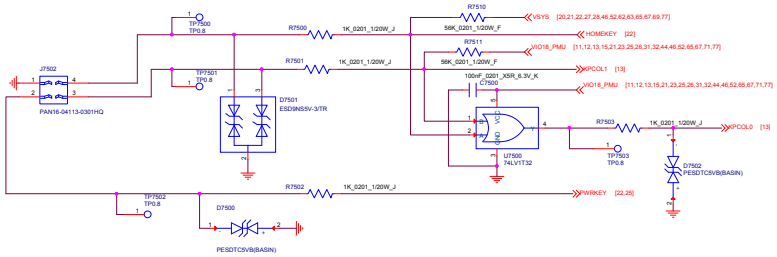

SoMC Mobile Communications, INC.		
Title 75_PERI_KEYPAD		
Size D	Project	Rev V5
Date: Friday, December 14, 2018	Sheet 75 of 99	

M-Sensor

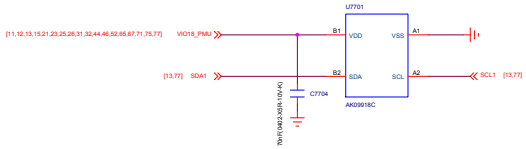

AL & PS Sensor

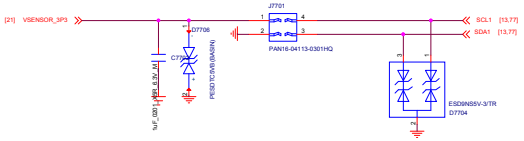

STK3321-35A I2C address:0X48

CHARGER/3COLOR LED

G Sensor

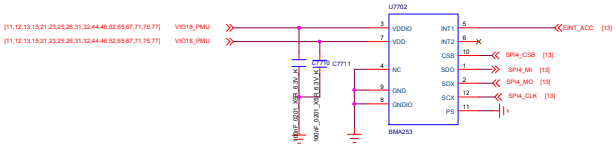

SoMC Mobile Communications, INC.		
Title 77_PERI_SENSORS_MEMs_ALS/PS		
Size D	Project	Rev V5
Date: Friday, December 14, 2018	Sheet 77 of 99	

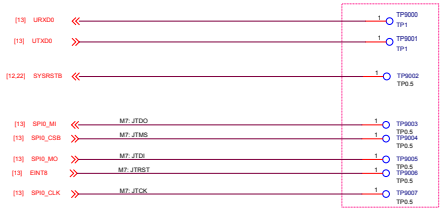

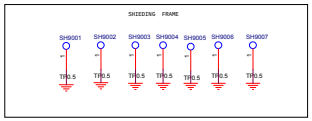

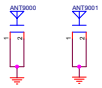

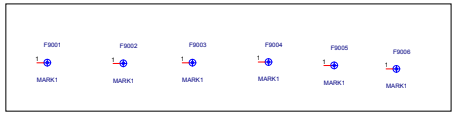

SoMC Mobile Communications, INC.		
Title 90_DEBUG_IO		
Size D	Project	Rev V5
Date: Friday, December 14, 2018	Sheet 90 of 99	